## TABLE OF CONTENTS


| DETAIL NUMBER | DETAIL NAME | LATEST REVISION |
|---|---|---|
| W-00 | TABLE OF CONTENTS | 01-26-15 |
| W-01.1 | POTABLE WATER SPECIFICATIONS | 01-26-15 |
| W-01.2 | POTABLE WATER SPECIFICATIONS | 11-10-14 |
| W-01.3 | POTABLE WATER SPECIFICATIONS | 11-10-14 |
| W-01.4 | POTABLE WATER SPECIFICATIONS | 08-18-14 |
| W-01.5 | POTABLE WATER SPECIFICATIONS | 01-04-12 |
| W-02.1 | NON POTABLE WATER SPECIFICATIONS | 11-10-14 |
| W-02.2 | NON POTABLE WATER SPECIFICATIONS | 11-17-14 |
| W-02.3 | NON POTABLE WATER SPECIFICATIONS | 11-17-14 |
| W-02.4 | NON POTABLE WATER SPECIFICATIONS | 01-04-12 |
| W-03 | TYPE A BEDDING AND TRENCHING DETAIL | 01-04-12 |
| W-04 | TYPE B BEDDING AND TRENCHING DETAIL | 01-04-12 |
| W-05 | SEPARATION OF WATER MAINS | 01-04-12 |
| W-06.1 | MECHANICAL JOINT RESTRAINTS | 11-10-14 |
| W-06.2 | MECHANICAL JOINT RESTRAINTS | 11-10-14 |
| W-07 | WATER/SEWER PIPE CONFLICT DETAIL | 11-13-14 |
| W-08 | GATE VALVE AND BOX DETAIL | 11-17-14 |
| W-09 | 2" AUTOMATIC AIR RELEASE VALVE | 11-10-14 |
| W-10 | TAPPING SLEEVE AND VALVE | 11-10-14 |
| W-11 | 2" BLOW OFF | 11-10-14 |
| W-12 | 4" BLOW OFF | 11-10-14 |
| W-13 | CONCRETE VALVE PAD | 11-10-14 |
| W-14.1 | WATER SERVICE CONNECTION | 11-17-14 |
| W-14.2 | DUAL WATER SERVICE CONNECTION | 11-17-14 |
| W-14.3 | QUAD WATER SERVICE CONNECTION | 11-17-14 |
| W-15 | LOCATING WIRE DETAIL | 11-17-14 |
| W-16 | UTILITY SLEEVE DETAIL | 11-10-14 |
| W-17 | REDUCED PRESSURE BACKFLOW PREVENTER | 11-10-14 |
| W-18 | DOUBLE CHECK BACKFLOW PREVENTER | 11-10-14 |
| W-19 | FIRE HYDRANT ASSEMBLY | 11-10-14 |
| W-20 | FIRE DEPARTMENT CONNECTION (3" OR GREATER) | 01-04-12 |
| W-21 | FIRE LINE BACKFLOW PREVENTER DEVICE | 11-10-14 |

# POTABLE WATER DISTRIBUTION SYSTEM

## SCOPE

THE WORK TO BE PERFORMED UNDER THIS SECTION CONSISTS OF FURNISHING ALL TOOLS, EQUIPMENT, MATERIAL, LABOR AND TRANSPORTATION AND PERFORMING ALL WORK NECESSARY FOR THE COMPLETE INSTALLATION OF ALL PIPE, FITTINGS, VALVES AND VALVE BOXES NECESSARY FOR A COMPLETE AND WORKABLE UNIT AS DETAILED ON THE DRAWINGS AND FURTHER DESCRIBED IN THESE SPECIFICATIONS.

THE PIPING AND OTHER MATERIAL AND EQUIPMENT SHALL BE OF THE SIZE, TYPE AND NUMBER SHOWN ON THE DRAWINGS AND/OR AS SPECIFIED HEREIN.

## PIPE

PLASTIC PIPE AND FITTINGS SHALL BE MANUFACTURED FROM VIRGIN PVC COMPOUND, WITH A CELL CLASSIFICATION OF 12454-B, WITH PLASTIC PIPE INSTITUTE (PPI) AND NATIONAL SANITATION FOUNDATION (NSF) APPROVAL FOR CARRYING POTABLE WATER. THE PIPE SHALL BE CONNECTED WITH RING-TITE COMPRESSION RING IN WHICH THE BELL IS AN INTEGRAL PART OF THE PIPE. NO SOLVENT WELDED JOINTS WILL BE ALLOWED FOR PIPES 2" AND OVER. DISTRIBUTION SYSTEM PIPING 3" AND LARGER SHALL BE AWWA C900, DR 18. PIPE SMALLER THAN 3" SHALL BE ASTM D2241 , SDR 21, 200 PSI PRESSURE RATING. ALL PIPE SHALL BEAR THE NSF SEAL OF APPROVAL (NSF-PW) ON EACH SECTION OF PIPE. UNDERGROUND PLASTIC PIPE SHALL BE SOLID-WALL BLUE PIPE, SHALL HAVE A CO-EXTRUDED BLUE EXTERNAL SKIN, OR SHALL BE WHITE OR BLACK PIPE WITH BLUE STRIPES INCORPORATED INTO, OR APPLIED TO, THE PIPE WALL.

POLYETHYLENE WATER SERVICE PIPE SHALL BE USED FOR SINGLE AND MULTIPLE SERVICES OF 2" AND LESS DIAMETER. THE P.E. PIPE OR TUBING SHALL BE HOMOGENOUS THROUGHOUT AND FREE OF VISIBLE CRACKS, HOLES, FOREIGN INCLUSIONS OR OTHER DEFECTS. IT SHALL BE UNIFORM IN COLOR, OPACITY, DENSITY AND OTHER PHYSICAL PROPERTIES. ALL POLYETHYLENE PIPE AND TUBING SHALL CONFORM TO ALL APPLICABLE REQUIREMENTS IN THE LATEST REVISION OF THE FOLLOWING STANDARDS UNLESS OTHERWISE SPECIFIED:

AWWAC901 – STANDARD SPECIFICATION FOR POLYETHYLENE (P.E.) PRESSURE PIPE, TUBING AND FITTINGS, 1/2" THROUGH 3", FOR WATER

ASTM D1248 – STANDARD SPECIFICATION FOR POLYETHYLENE MOLDING AND EXTRUSION MATERIALS

ASTM D2737 – STANDARD SPECIFICATION FOR POLYETHYLENE (P.E.) PLASTIC TUBING (CTS – O.D.)

PE 4710 RESIN, ENDOT ENDOPURE ONLY. BLUE WITH VIRGIN CLEAR CENTER

DUCTILE IRON PIPE SHALL BE DESIGNED IN ACCORDANCE WITH ANSI STANDARD A21.51-86 (AWWA C151-86) – LATEST DUCTILE IRON PIPE, CENTRIFUGALLY CAST IN METAL MOLDS OR SAND-LINED MOLDS FOR WATER OR OTHER LIQUIDS. PIPE SHALL HAVE DESIGN VALUES OF 60,000 PSI TENSILE STRENGTH, 42,000 PSI YIELD STRENGTH, AND 10% MINIMUM ELONGATION. PIPE SHALL BE CEMENT-LINED AND SHALL UTILIZE PUSH-ON JOINTS CONFORMING TO THE REQUIREMENTS OF ANSI A21.11 (AWWA C111). THE PRESSURE RATING, METAL THICKNESS CLASS, NET WEIGHT OF PIPE WITHOUT LINING, LENGTH OF PIPE, AND NAME OF MANUFACTURER SHALL BE CLEARLY MARKED ON EACH LENGTH OF PIPE. FOR DUCTILE IRON PIPE, ANSI WALL THICKNESS SHALL BE A MINIMUM OF THICKNESS CLASS 50. UNDERGROUND METAL PIPE SHALL HAVE BLUE STRIPES APPLIED TO THE PIPE WALL.

ALL UNDERGROUND FITTINGS 3" AND LARGER FOR DUCTILE IRON PIPE AND PVC PIPE SHALL BE DUCTILE IRON FITTINGS AND HAVE MECHANICAL JOINT ENDS, SHALL BE CEMENT MORTAR LINED AND BITUMINOUS SEALED, SHALL BE CLASS 250 MINIMUM AND SHALL CONFORM TO ANSI A21.10 (AWWA C110) –LATEST OR ANSI A21.53 (AWWA C153) LATEST. APPROVED MANUFACTURERS: TYLER-UNION.

ALL UNDERGROUND FITTINGS LESS THAN 3" SHALL BE SCHEDULE 40 PVC PUSH-ON JOINTS.

## VALVES

GATE VALVES SMALLER THAN 2" SHALL MEET FEDERAL SPECIFICATION WW-V-54 TYPE I, CLASS A. VALVES SHALL HAVE THREADED ENDS, ROUGH BODIES AND FINISHED TRIMMINGS, RISING STEMS AND 2" OPERATING NUTS.

GATE VALVES 2" AND OVER IN SIZE SHALL BE RESILIENT-WEDGE WITH CAST IRON OR DUCTILE IRON BODIES MEETING AWWA C509 OR AWWA C515 –LATEST. VALVES SHALL HAVE EITHER THREADED OR MECHANICAL JOINT CONNECTIONS, NON-RISING STEMS AND 2" SQUARE OPERATING NUTS. RESILIENT-WEDGE GATE VALVES SHALL BE MUELLER #2360 SERIES OR EJ FLOWMASTER SERIES OR APPROVED EQUAL.

TAPPING SLEEVES AND VALVES

FOR TAPS 4" AND LARGER ON MAIN LINES 6" AND LARGER, THE TAPPING SLEEVE SHALL BE A FORD FAST TAPPING SLEEVE AND THE TAPPING VALVE SHALL BE A MUELLER T2360, EJ FLOWMASTER, OR APPROVED EQUAL.

FOR TAPS SMALLER THAN 4" ON MAIN LINES LARGER THAN 2" AND LESS THAN 6", THE SADDLE SHALL BE A DOUBLE STRAP, IRON BODY SADDLE WITH STEEL BANDS, FORD F202 OR APPROVED EQUAL. THE TAPPING VALVE SHALL BE A BRASS CORPORATION STOP OR A RESILIENT SEATED GATE VALVE. FOR A SERVICE LINE, THE TAPPING VALVE SHALL BE A BRASS CORPORATION STOP, FORD FB1100-NL OR APPROVED EQUAL.

WHEN TAPPING A MAIN LINE 3" OR LESS, THE SADDLE SHALL BE FORD S71 OR APPROVED EQUAL. THE TAPPING VALVE SHALL BE A BRASS CORPORATION STOP, FORD FB1100-NL OR APPROVED EQUAL.

VALVE BOXES

VALVE BOXES FOR VALVES SHALL BE TYLER-UNION FOUNDRY DOMESTIC #461-S, FINE GRAIN CAST IRON ROADWAY BOXES WITH A 5-1/4" SHAFT, ADJUSTABLE HEIGHT BY SCREWING FOR THE TRENCH DEPTH SPECIFIED ON THE DRAWINGS. BOXES ARE TO BE COMPLETE WITH TOP AND BASE SECTION AND DROP TOP COVER WITH THE WORD 'WATER" PERMANENTLY CAST IN IT.

BLOW-OFF VALVE ASSEMBLY

THE CONTRACTOR SHALL FURNISH AND INSTALL BLOW-OFF ASSEMBLIES IN THE LOCATIONS SHOWN ON THE DRAWINGS. EACH ASSEMBLY SHALL CONSIST OF A BLOW-OFF BRANCH, 2" EJ FLOWMASTER THREADED MODEL GATE VALVE W/ 2" OPERATING NUT, CAP, FITTINGS, INTER-CONNECTING PIPING AND THRUST BLOCKING. SIZES SHALL BE AS SHOWN IN THE DETAIL DRAWING. PIPE AND FITTINGS SHALL BE AS SPECIFIED IN THE PRECEDING PARAGRAPHS.

METER BOX ASSEMBLY

THE CONTRACTOR SHALL FURNISH AND INSTALL METER BOX ASSEMBLIES IN THE LOCATIONS SHOWN ON THE DRAWINGS. EACH ASSEMBLY SHALL INCLUDE AN ANGLE METER VALVE, A U-BRANCH OR Y-BRANCH AS APPLICABLE, AND A WATER METER BOX.

ACCEPTABLE MANUFACTURERS SHALL BE:
DUAL BOX - DFW ROTEC #39F BLACK COMPLETE W/ CI READER
SINGLE BOX - DFW ROTEC #36F BLACK COMPLETE W/ CI READER

ALL WATER METERS WILL BE INSTALLED BY THE CITY. A DUAL CHECK VALVE OR DOUBLE CHECK VALVE SHALL BE INSTALLED WHERE APPROPRIATE. BACKFLOW DEVICES SHALL BE INSTALLED BY THE DEVELOPER/OWNER. BACKFLOW DEVICES SHALL BE TESTED BY A CERTIFIED TESTER AND THE RESULTS SUBMITTED TO THE WATER DEPARTMENT FOR VERIFICATION.

PIPE LAYING

PRIOR TO CONNECTION OF NEW MAINS TO EXISTING STUBS, THE UTILITY SHALL INSTALL A LOCKING VALVE BOX COVER ON THE EXISTING TIE-IN VALVE TO PREVENT UNSUPERVISED OPENING OF THE VALVE.

THE APPROXIMATE LOCATION OF THE WATER LINES WILL BE STAKED IN THE FIELD BY THE SURVEYOR, BUT INSTALLATION OF THE WATER LINE WILL BE ROUTED AROUND ANY AND ALL TREES, ROOTS AND OTHER OBSTRUCTIONS ON LINE.

UNLESS SPECIFICALLY DESIGNATED ON THE DRAWINGS, OR SO ORDERED BY THE ENGINEER, THE PIPE SHALL BE BURIED TO A DEPTH TO OBTAIN AT LEAST 36" OF COVER.

THE CONTRACTOR SHALL INSTALL EARLY WARNING TAPE 12" TO 18" ABOVE TOP OF PIPE. IN ADDITION, THE CONTRACTOR SHALL INSTALL A #12 AWG COPPER WIRE CONTINUOUS FOR TRACING.

BEFORE THE PIPE IS LAID IN THE TRENCH THE EARTH FORMING THE BED SHALL BE CAREFULLY FREED OF ALL STONES, ROOTS, ETC. THE BOTTOM OF THE TRENCH WILL BE EXCAVATED BY HAND AND A FIRM FULL-LENGTH SUPPORT FORMED FOR ALL PIPE, VALVES AND FITTINGS. THE PIPE SHALL BE LAID BY SNAKING IN THE TRENCH.

PIPE JOINTS - ALL SURFACES OF THE PORTIONS OF THE PIPE AND JOINTING MATERIAL TO BE JOINED SHALL BE CLEAN AND DRY. FOR THE INSTALLATION OF PIPE WITH THE "COMPRESSION RING" FITTING, A BELL RING LUBRICANT SHALL BE APPLIED TO THE BEVELED PORTION OF THE SPIGOT END. SUCH LUBRICANT SHALL BE OF THE TYPE AND QUALITY AS RECOMMENDED BY THE PIPE MANUFACTURER. CARE SHALL BE EXERCISED TO INSURE THAT THE COMPRESSION RING IS PROPERLY SEATED AND THE PIPE IS COMPLETELY INSERTED SO THAT THE REFERENCE MARKS ON THE SPIGOT END CAN JUST BE SEEN.

MECHANICAL RESTRAINTS SHALL BE PROVIDED AT ALL POINTS WHERE THE LINE BENDS GREATER THAN 10° AND AT ALL WYES, TEES, CAPS, VALVES AND REDUCERS.

CONNECTIONS WILL BE MADE TO THE EXISTING AND/OR CONSTRUCTED FACILITIES IN ACCORDANCE WITH STANDARD PLUMBING PRACTICE. ANY CONNECTIONS MADE BETWEEN ANY WATER PIPE AND ANY OTHER TUBE PIPE SHALL BE MADE USING CONNECTORS AND ADAPTERS DESIGNED FOR THE PURPOSE OF CONNECTING THE TWO TYPES OF PIPE.

SINGLE AND MULTIPLE SERVICES SHALL BE AS SPECIFIED AND SHALL BE MADE BY INSTALLING A DOUBLE STRAP SADDLE OF THE APPROPRIATE SIZE FOR THE MATERIAL USED AND A CTS THREAD ADAPTER DESIGNED FOR USE WITH THE POLYETHYLENE PIPE. THE POLYETHYLENE PIPE SHALL THEN BE INSTALLED TO THE PROPER ALIGNMENT AND DEPTH AND CONNECTED TO THE METER BOX ASSEMBLY WITH A COMPRESSION TYPE ADAPTER DESIGNED FOR USE WITH PE TUBING.

VALVE BOXES SHALL BE SET TO CONFORM ACCURATELY TO THE FINISHED PAVEMENT SURFACE. ALL ADJUSTMENTS REQUIRED FOR GRADE SHALL BE DONE AFTER ALL BASE CONSTRUCTION HAS BEEN COMPLETED. IMMEDIATELY BEFORE THE PLACEMENT OF THE FINAL ASPHALT SURFACE COURSE, THE VALVE SHALL BE UNCOVERED AND THE VALVE BOX SO PLACED AS TO ACCURATELY MEET THE FINISHED PAVEMENT GRADE. THE AREA EXCAVATED IN THE LIME ROCK BASE COURSE TO ALLOW FOR ADJUSTMENT OF THE VALVE BOX TO GRADE SHALL BE BACKFILLED WITH LIME ROCK AND COMPACTED TO THE SAME DENSITY AS THE LIMEROCK BASE COURSE.

AT THE END OF EACH WORK DAY AND/OR WHEN THE PIPE IS LEFT OPEN FOR LONG PERIODS, ALL OPEN ENDS OF THE PIPE WILL BE SUFFICIENTLY COVERED TO PREVENT ENTRANCE OF TRASH OR WILDLIFE.

ANY PIPE INSTALLED AND SUBSEQUENTLY REMOVED SHALL NOT BE REINSTALLED AND SHALL IMMEDIATELY BE REMOVED FROM THE JOB SITE.

CLEARANCE REQUIREMENTS

VERTICAL SEPARATION BETWEEN UNDERGROUND WATER MAINS AND SANITARY OR STORM SEWER LINES, WASTEWATER OR STORMWATER FORCE MAIN, OR RECLAIMED WATER PIPELINES:

(1) NEW OR RELOCATED UNDERGROUND WATER MAINS CROSSING ANY EXISTING OR PROPOSED GRAVITY–TYPE OR VACUUM–TYPE SANITARY SEWER OR STORM SEWER LINES SHALL BE LAID SO THE OUTSIDE OF THE WATER MAIN IS AT LEAST 6", AND PREFERABLY 12", ABOVE OR AT LEAST 12" BELOW THE OUTSIDE OF THE OTHER PIPELINE. HOWEVER, IT IS PREFERABLE TO LAY THE WATER MAIN ABOVE THE OTHER PIPELINE.

(2) NEW OR RELOCATED UNDERGROUND WATER MAINS CROSSING ANY EXISTING OR PROPOSED PRESSURE–TYPE SANITARY SEWER, WASTEWATER OR STORMWATER FORCE MAIN, OR PIPELINE CONVEYING RECLAIMED WATER SHALL BE LAID SO THE OUTSIDE OF THE WATER MAIN IS AT LEAST 12" ABOVE OR BELOW THE OUTSIDE OF THE OTHER PIPELINE. HOWEVER, IT IS PREFERABLE TO LAY THE WATER MAIN ABOVE THE OTHER PIPELINE.

(3) AT THE UTILITY CROSSINGS DESCRIBED IN PARAGRAPHS (1) AND (2) ABOVE, ONE FULL LENGTH OF WATER MAIN PIPE SHALL BE CENTERED ABOVE OR BELOW THE OTHER PIPELINE SO THE WATER MAIN JOINTS WILL BE AS FAR AS POSSIBLE FROM THE OTHER PIPELINE. ALTERNATIVELY, AT SUCH CROSSINGS, THE PIPES SHALL BE ARRANGED SO THAT ALL WATER MAIN JOINTS ARE AT LEAST 3' FROM ALL JOINTS IN VACUUM–TYPE SANITARY SEWER LINES, STORM SEWER LINES, STORMWATER FORCE MAINS, OR PIPELINES CONVEYING RECLAIMED WATER REGULATED UNDER PART III OF CHAPTER 62–610, FAC. AND AT LEAST 6' FROM ALL JOINTS IN GRAVITY–TYPE OR PRESSURE–TYPE SANITARY SEWER LINES, WASTEWATER FORCE MAINS OR PIPELINES CONVEYING RECLAIMED WATER NOT REGULATED UNDER PART III OF CHAPTER 62–610, FAC.

(4) SEPARATION BETWEEN WATER MAINS AND SANITARY OR STORM SEWER MANHOLES:

A. NO WATER MAIN SHALL PASS THROUGH, OR COME IN CONTACT WITH, ANY PART OF A SANITARY MANHOLE.

B. WATER MAINS SHALL NOT BE CONSTRUCTED OR ALTERED TO PASS THROUGH, OR COME INTO ANY CONTACT WITH, ANY PART OF A STORM SEWER MANHOLE OR INLET STRUCTURE.

(5) WHERE AN UNDERGROUND WATER MAIN IS BEING LAID LESS THAN 3' HORIZONTALLY FROM ANOTHER PIPELINE AND WHERE AN UNDERGROUND WATER MAIN IS CROSSING ANOTHER PIPELINE AND IS BEING LAID LESS THAN THE REQUIRED MINIMUM VERTICAL DISTANCE FROM THE OTHER PIPELINE:

A. USE OF PIPE OR CASING PIPE, HAVING HIGH IMPACT STRENGTH (I.E., HAVING AN IMPACT STRENGTH AT LEAST EQUAL TO THAT OF 0.25"–THICK DUCTILE IRON PIPE) OR CONCRETE ENCASEMENT AT LEAST 4" THICK FOR THE WATER MAIN; AND

B. USE OF PIPE OR CASING PIPE HAVING HIGH IMPACT STRENGTH (I.E. HAVING AN IMPACT STRENGTH AT LEAST EQUAL TO THAT OF 0.25"–THICK DUCTILE IRON PIPE) OR CONCRETE ENCASEMENT AT LEAST 4" THICK FOR THE OTHER PIPELINE IF IT IS NEW AND IS CONVEYING WASTEWATER OR RECLAIMED WATER.

HORIZONTAL SEPARATION BETWEEN UNDERGROUND WATER MAINS AND SANITARY OR STORM SEWER LINES, WASTEWATER OR STORMWATER FORCE MAIN, RECLAIMED WATER PIPELINES, AND ON-SITE SEWAGE TREATMENT AND DISPOSAL SYSTEMS.

(1) NEW OR RELOCATED UNDERGROUND WATER MAINS SHALL BE LAID TO PROVIDE A HORIZONTAL DISTANCE OF AT LEAST 3' BETWEEN THE OUTSIDE OF THE WATER MAIN AND THE OUTSIDE OF ANY EXISTING OR PROPOSED STORM SEWER LINE, STORMWATER FORCE MAIN, OR PIPELINE CONVEYING RECLAIMED WATER REGULATED UNDER PART III OF CHAPTER 62-610, FAC.

(2) NEW OR RELOCATED UNDERGROUND WATER MAINS SHALL BE LAID TO PROVIDE HORIZONTAL DISTANCE OF AT LEAST 3', AND PREFERABLY 10' BETWEEN THE OUTSIDE OF THE WATER MAIN AND THE OUTSIDE OF ANY EXISTING OR PROPOSED VACUUM-TYPE SANITARY SEWER LINE.

(3) NEW OR RELOCATED UNDERGROUND WATER MAINS SHALL BE LAID TO PROVIDE A HORIZONTAL DISTANCE OF AT LEAST 6', AND PREFERABLY 10', BETWEEN THE OUTSIDE OF THE WATER MAIN AND THE OUTSIDE OF ANY EXISTING OR PROPOSED GRAVITY-TYPE OR PRESSURE-TYPE SANITARY SEWER LINE, WASTEWATER FORCE MAIN, OR PIPELINE CONVEYING RECLAIMED WATER NOT REGULATED UNDER PART III OF CHAPTER 62-610, F.A.C. THE MINIMUM HORIZONTAL SEPARATION DISTANCE BETWEEN WATER MAINS AND GRAVITY-TYPE SANITARY SEWER LINES SHALL BE REDUCED TO 3' WHERE THE BOTTOM OF THE WATER MAIN IS LAID AT LEAST 6" ABOVE THE TOP OF THE SEWER LINE.

(4) NEW OR RELOCATED UNDERGROUND WATER MAINS SHALL BE LAID TO PROVIDE A HORIZONTAL DISTANCE OF AT LEAST 10' BETWEEN THE OUTSIDE OF THE WATER MAIN AND ALL PARTS OF ANY EXISTING OR PROPOSED ON-SITE SEWAGE TREATMENT AND DISPOSAL SYSTEM, AS DEFINED IN SECTION 381.0065(2), F.S. AND RULE 64E-6002, F.A.C.

(5) WHERE AN UNDERGROUND WATER MAIN IS BEING LAID LESS THAN THE REQUIRED MINIMUM HORIZONTAL DISTANCE FROM ANOTHER PIPELINE AND WHERE AN UNDERGROUND WATER MAIN IS CROSSING ANOTHER PIPELINE AND JOINTS IN THE WATER MAIN ARE BEING LOCATED LESS THAN THE REQUIRED MINIMUM DISTANCE FROM JOINTS IN OTHER PIPELINE:

A. USE OF PRESSURE-RATED PIPE CONFORMING TO THE AWWA STANDARDS INCORPORATED INTO RULE 62-555.330, FAC. FOR THE OTHER PIPELINE IF IT IS GRAVITY-TYPE OR VACUUM-TYPE PIPELINE;

B. USE OF WELDED, FUSED, OR OTHERWISE RESTRAINED JOINTS FOR EITHER THE WATER MAIN OR THE OTHER PIPELINE; OR

C. USE OF WATER-TIGHT CASING PIPE OR CONCRETE ENCASEMENT AT LEAST 4" THICK FOR EITHER THE WATER MAIN OR THE OTHER PIPELINE.

TESTING

AFTER THE PIPE HAS BEEN CONNECTED AND LAID IN THE TRENCHES, ENOUGH BACKFILL BETWEEN JOINTS WILL BE MADE TO INSURE THE ANCHORAGE OF THE PIPE IN THE TRENCH AND THE LINES PRESSURE TESTED. THE CONTRACTOR SHALL CONTACT THE UTILITY TO UNLOCK THE VALVE BOX COVER AT THE POINT OF CONNECTION AND FILL THE LINE WITH WATER. THE VALVE SHALL BE CLOSED AND LOCKED AFTER LINE FILLING AND THE CONTRACTOR SHALL INSTALL THE NECESSARY FIXTURES PUMPS, GAUGES, ETC. TO SUBJECT THE LINES TO A HYDROSTATIC GAUGE PRESSURE OF 150 PSI.

EACH INDIVIDUAL BRANCH LINE OF LOOP SHALL BE SUBJECTED TO THE 150 PSI PRESSURE AND MAINTAINED FOR AT LEAST 15 MINUTES WITH NO LOSS OF PRESSURE. ANY DEFECTS OR LEAKS REVEALED WILL BE LOCATED AND REPAIRED AND ANOTHER PRESSURE TEST RUN BEFORE BACKFILLING.

AFTER THE TESTING OF THE INDIVIDUAL BRANCH LINES, THOSE PORTIONS OF THE LINE WILL BE APPROVED FOR BACKFILL, BUT THE JOINTS WHERE EACH BRANCH LINE CONNECTS TO A MAIN OR ANOTHER BRANCH LINE SHALL REMAIN OPEN. AFTER TESTING OF ALL BRANCH LINES AND THE COMPLETE CONNECTION OF THE ENTIRE DISTRIBUTION SYSTEM, A PRESSURE TEST WILL BE RUN ON THE ENTIRE SYSTEM. A PRESSURE OF 150 PSI WILL BE PUT ON THE SYSTEM AND WILL BE MAINTAINED FOR AT LEAST 2 HOURS WITH NO LOSS IN PRESSURE IN ACCORDANCE WITH THE PROCEDURES SPECIFIED IN AWWA MANUAL NO. 23 AND AWWA C605 FOR PVC WATER MAINS OR AWWA C600 FOR DUCTILE IRON WATER MAINS. AFTER THE SYSTEM MAINTAINS THE TEST PRESSURE, THE ENTIRE SYSTEM MAY BE BACKFILLED.

ALL WATER DISTRIBUTION SYSTEM PRESSURE TESTING SHALL BE COMPLETED A MINIMUM OF 30 DAYS PRIOR TO THE PROJECT SUBSTANTIAL COMPLETION DATE OR AS REQUIRED BY THE CITY ENGINEER.

BACKFILLING

TRENCHES SHALL BE BACKFILLED WITH THE EXCAVATED MATERIALS FROM WHICH LARGE CLODS OR STONES HAVE BEEN REMOVED AND SHALL BE CAREFULLY DEPOSITED IN LAYERS NOT TO EXCEED 12" AND THOROUGHLY AND CAREFULLY RAMMED UNTIL ENOUGH FILL HAS BEEN PLACED TO PROVIDE A COVER OF NOT LESS THAN 2' ABOVE THE PIPE. THE REMAINDER OF THE BACKFILL MATERIAL MAY THEN BE PLACED AND SHOULD BE MOISTENED AND TAMPED TO INSURE PROPER COMPACTION.

BACKFILL SHALL NOT BE PLACED OVER ANY PLASTIC PIPE WHILE IT IS IN A HEATED CONDITION. BEFORE BACKFILLING THE PIPE, THE TEMPERATURE SHALL BE BROUGHT TO THE APPROXIMATE TEMPERATURE OF THE GROUND EITHER BY RUNNING WATER THROUGH IT OR BY BACKFILLING IN THE EARLY MORNING WHEN THE PIPE AND GROUND ARE AT THE SAME TEMPERATURE.

WHENEVER THE TRENCHES HAVE NOT BEEN PROPERLY FILLED, OR IF SETTLEMENT OCCURS, THEY SHALL BE REFILLED, COMPACTED, SMOOTHED OFF, AND FINALLY MADE TO CONFORM TO THE SURFACE OF THE GROUND. BACKFILL IN OPEN TRENCHES ACROSS ROADWAYS OR OTHER AREAS WHICH ARE TO BE REPAVED SHALL BE MADE AS SPECIFIED ABOVE EXCEPT THAT THE ENTIRE FILL ABOVE PIPE SHALL BE DEPOSITED IN LAYERS NOT TO EXCEED 12" IN THICKNESS, MOISTENED AND COMPACTED TO 98% OF MAXIMUM DENSITY AS DETERMINED BY AASHTO T-180 SO THAT WHEN BACKFILLING IS COMPLETED, THE ROADWAY PAVING MAY BE PLACED IMMEDIATELY.

DISINFECTING

DISINFECTING THE WATER MAIN AND CONDUCTING BACTERIOLOGICAL SURVEYS AND EVALUATIONS MUST BE DONE IN ACCORDANCE WITH AWWA C651.

AFTER THE INSTALLATION HAS BEEN COMPLETED, THE CONTRACTOR SHALL CONTACT THE UTILITY TO UNLOCK THE VALVE BOX COVER AT THE POINT OF CONNECTION AND THE WATER LINES AND APPURTENANCES SHALL BE THOROUGHLY FLUSHED AND THEN DISINFECTED BY THE APPLICATION OF CHLORINE, EITHER GASEOUS OR IN HYPOCHLORITE FORM, UNTIL A RESIDUAL CHLORINE CONTENT OF AT LEAST 50 PPM IS OBTAINED THROUGHOUT THE SYSTEM. THIS CHLORINATED WATER SHALL REMAIN IN THE LINES FOR A PERIOD OF 24 HOURS, DURING WHICH TIME THE VALVES SHALL BE OPENED SEVERAL TIMES IN ORDER TO WET ALL OF THE PARTS.

UPON COMPLETION OF THE FLUSHING AND DISINFECTION OF THE WATER LINES, THE CONTRACTOR SHALL HAVE WATER SAMPLES TESTED FOR BACTERIOLOGICAL MAIN CLEARANCE IN ACCORDANCE WITH APPLICABLE STATE OF FLORIDA DEPT. OF ENVIRONMENTAL PROTECTION (F.D.E.P.) REQUIREMENTS. IN THE EVENT THAT THESE TESTS FAIL DUE TO CONTAMINATION, INADEQUATE STERILIZATION, OR FOR ANY OTHER CAUSE DIRECTLY RELATED TO THE WORK OF THE CONTRACTOR, THE WATER LINES SHALL BE DISINFECTED BY THE CONTRACTOR AT NO ADDITIONAL COST TO THE OWNER. THE COST OF THE NECESSARY RETESTING FOR BACTERIOLOGICAL MAIN CLEARANCE SHALL BE CHARGED DIRECTLY TO THE CONTRACTOR OR DEDUCTED FROM ANY PAYMENT DUE.

EXCEPT AS REQUIRED FOR FLUSHING, DISINFECTION, AND BACTERIOLOGICAL MAIN CLEARANCE SAMPLING, THE TIE-IN VALVE SHALL REMAIN CLOSED AND LOCKED UNTIL THE NEW SYSTEM HAS BEEN CLEARED FOR SERVICE BY THE F.D.E.P.

PLUMBING CODE

ALL PIPING AND RELATED FITTING SHALL BE INSTALLED ACCORDING TO THE PLUMBING CODE OF THE STATE OF FLORIDA, LOCAL AUTHORITIES AND MANUFACTURER'S RECOMMENDATIONS. WHEREVER THESE SPECIFICATIONS AND/OR DRAWINGS EXCEED THE REQUIREMENTS OF SAID CODES, THESE DOCUMENTS TAKE PRECEDENCE. THE PIPING MUST BE INSTALLED IN A STRONG, NEAT AND WORKMANLIKE MANNER, SUBJECT TO THE RESTRICTIONS INDICATED.

# NON-POTABLE WATER DISTRIBUTION SYSTEM

## SCOPE

THE WORK TO BE PERFORMED UNDER THIS SECTION CONSISTS OF FURNISHING ALL TOOLS, EQUIPMENT, MATERIAL, LABOR AND TRANSPORTATION AND PERFORMING ALL WORK NECESSARY FOR THE COMPLETE INSTALLATION OF ALL PIPE, FITTINGS, VALVES, VALVE BOXES, AND FIRE HYDRANTS NECESSARY FOR A COMPLETE AND WORKABLE UNIT AS DETAILED ON THE DRAWINGS AND FURTHER DESCRIBED IN THESE SPECIFICATIONS.

THE PIPING AND OTHER MATERIAL AND EQUIPMENT SHALL BE OF THE SIZE, TYPE AND NUMBER SHOWN ON THE DRAWINGS AND/OR AS SPECIFIED HEREIN. ITEMS DESCRIBED HEREIN AND NOT INCLUDED ON THE DRAWINGS SHALL BE DISREGARDED.

## PIPE

PLASTIC PIPE AND FITTINGS SHALL BE MANUFACTURED FROM VIRGIN PVC COMPOUND, WITH A CELL CLASSIFICATION OF 12454-B, WITH PLASTIC PIPE INSTITUTE (PPI). THE PIPE SHALL BE CONNECTED WITH RING-TITE COMPRESSION RING IN WHICH THE BELL IS AN INTEGRAL PART OF THE PIPE. NO SOLVENT WELDED JOINTS WILL BE ALLOWED FOR PIPES 2" AND OVER. DISTRIBUTION SYSTEM PIPING 3" AND LARGER SHALL BE AWWA C900 OR C905, DR-25. DEDICATED FIRE LINES SERVING BUILDING STRUCTURE SPRINKLER SYSTEMS SHALL BE AWWA C900 OR C904, DR14. DEDICATED FIRE LINES SHALL BE INSTALLED BY A CONTRACTOR LICENSED IN FLORIDA TO INSTALL FIRE LINES. PIPES SMALLER THAN 3" SHALL BE ASTM D2241, SDR-21, WITH A PRESSURE RATING OF 200 PSI. ALL PIPE SHALL BE COLOR-CODED WITH PANTONE PURPLE 522C.

POLYETHYLENE WATER SERVICE PIPE SHALL BE USED FOR SINGLE AND MULTIPLE SERVICES OF 2" AND LESS DIAMETER. THE PE PIPE OR TUBING SHALL BE HOMOGENOUS THROUGHOUT AND FREE OF VISIBLE CRACKS, HOLES, FOREIGN INCLUSIONS OR OTHER DEFECTS. IT SHALL BE UNIFORM IN COLOR, OPACITY, DENSITY AND OTHER PHYSICAL PROPERTIES. ALL POLYETHYLENE PIPE AND TUBING SHALL CONFORM TO ALL APPLICABLE REQUIREMENTS IN THE LATEST REVISION OF THE FOLLOWING STANDARDS UNLESS OTHERWISE SPECIFIED:

AWWA C901 – STANDARD FOR POLYETHYLENE (PE) PRESSURE PIPE, TUBING AND FITTINGS, 1/2" THROUGH 3", FOR WATER

ASTM D1248 – STANDARD SPECIFICATION FOR POLYETHYLENE MOLDING AND EXTRUSION MATERIALS

ASTM D2737 – STANDARD SPECIFICATION FOR POLYETHYLENE (PE) PLASTIC TUBING (CTS – O.D.)

PE 4710 RESIN, ENDOT ENDOCORE ONLY, PURPLE WITH VIRGIN CLEAR CENTER

THE PE PIPE OR TUBING SHALL BE RATED FOR USE WITH WATER AT 73.4O F AT A HYDROSTATIC DESIGN STRESS OF 630 PSI AND A MAXIMUM WORKING PRESSURE OF 160 PSI. THE DIMENSIONS AND TOLERANCES SHALL COMPLY WITH: COPPER TUBE SIZE (DR-9) ASTM D2737. PE PIPE SHALL BE ENDOT INDUSTRIES, RECLAIMED WATER PE-4710 CTS TUBING, (DR-9), 250 PSI. FITTINGS AND VALVES FOR USE WITH POLYETHYLENE PIPE SHALL BE BRONZE BODY IN ACCORDANCE WITH THE LATEST EDITION OF AWWA C800 AND SHALL HAVE COMPRESSION TYPE JOINT CONNECTIONS SPECIFICALLY DESIGNED FOR USE WITH POLYETHYLENE PIPE. VALVES SHALL BE OF THE BALL VALVE TYPE WITH MOLDED BUNA-N RUBBER SEATS TO SUPPORT THE BALL DOUBLE BUNA-N RUBBER O-RINGS IN THE STEM. STAINLESS STEEL INSERT STIFFENERS SHALL BE USED WITH ALL FITTINGS AND VALVES.

GALVANIZED STEEL WATER PIPE SHALL BE GALVANIZED STEEL MEETING FEDERAL SPECIFICATION WW-P406, CLASS 2 ZINC COATED STANDARD WEIGHT UNLESS OTHERWISE SPECIFIED. FITTINGS SHALL BE GALVANIZED MALLEABLE IRON MEETING FEDERAL SPECIFICATION WW-P-521D.

## DUCTILE IRON PIPE

DUCTILE IRON PIPE SHALL BE DESIGNED IN ACCORDANCE WITH ANSI STANDARD A21.51-86 (AWWA C151-86) LATEST DUCTILE IRON PIPE, CENTRIFUGALLY CAST IN METAL MOLDS OR SAND-LINED MOLDS FOR WATER OR OTHER LIQUIDS. PIPE SHALL HAVE DESIGN VALUES OF 60,000 PSI TENSILE STRENGTH, 42,000 PSI YIELD STRENGTH, AND 10% MINIMUM ELONGATION. PIPE SHALL BE CEMENT-LINED AND SHALL UTILIZE PUSH-ON JOINTS CONFORMING TO THE REQUIREMENTS OF ANSI A21.11 (AWWA C111). THE PRESSURE RATING, METAL THICKNESS CLASS, NET WEIGHT OF PIPE WITHOUT LINING. LENGTH OF PIPE, AND NAME OF MANUFACTURER SHALL BE CLEARLY MARKED ON EACH LENGTH OF PIPE. FOR DUCTILE IRON PIPE, ANSI WALL THICKNESS SHALL BE A MINIMUM OF THICKNESS CLASS 50.

ALL UNDERGROUND FITTINGS 3" AND LARGER FOR DUCTILE IRON PIPE AND PVC PIPE SHALL BE DUCTILE IRON FITTINGS AND HAVE MECHANICAL JOINT ENDS, SHALL BE CEMENT MORTAR LINED AND BITUMINOUS SEALED, SHALL BE CLASS 250 MINIMUM AND SHALL CONFORM TO ANSI A21.10 (AWWA C110) –LATEST OR NSI A21.53 (AWWA C153) LATEST. ALL FITTINGS SHALL BE DOMESTIC ONLY. APPROVED MANUFACTURERS: TYLER-UNION

ALL UNDERGROUND FITTINGS LESS THAN 3" SHALL BE SCHEDULE 40 PVC PUSH-ON JOINTS.

VALVES

GATE VALVES SMALLER THAN 2" SHALL MEET FEDERAL SPECIFICATION WW-V-54 TYPE I, CLASS A. VALVES SHALL HAVE THREADED ENDS, ROUGH BODIES AND FINISHED TRIMMINGS, RISING STEMS AND 2" OPERATING NUTS.

GATE VALVES 2" AND OVER IN SIZE SHALL BE RESILIENT-WEDGE WITH CAST IRON OR DUCTILE IRON BODIES MEETING AWWA C509 OR AWWA C515 - LATEST. VALVES SHALL HAVE EITHER THREADED OR MECHANICAL JOINT CONNECTIONS, NON-RISING STEMS, AND 2" SQUARE OPERATING NUTS. RESILIENT-WEDGE GATE VALVES SHALL BE MUELLER #2360 SERIES OR EJ FLOWMASTER SERIES.

TAPPING SLEEVES AND VALVES

FOR TAPS 4" AND LARGER ON MAIN LINES 6" AND LARGER, THE TAPPING SLEEVE SHALL BE A FORD FAST AND THE TAPPING VALVE SHALL BE A MUELLER T2360 OR EJ FLOWMASTER SERIES.

FOR TAPS SMALLER THAN 4" ON MAIN LINES LARGER THAN 2" AND LESS THAN 8", THE SADDLE SHALL BE A DOUBLE STRAP, IRON BODY SADDLE WITH STEEL BANDS, FORD F202 OR APPROVED EQUAL. THE TAPPING VALVE SHALL BE A BRASS CORPORATION STOP OR A RESILIENT SEATED GATE VALVE. FOR A SERVICE LINE, THE TAPPING VALVE SHALL BE A BRASS CORPORATION STOP, FORD FB 1100-NL OR APPROVED EQUAL.

WHEN TAPPING A MAIN LINE 3" OR LESS, THE SADDLE SHALL BE FORD S71 OR APPROVED EQUAL. THE TAPPING VALVE SHALL BE A BRASS CORPORATION STOP, FORD FB1100-NL OR APPROVED EQUAL.

VALVE BOXES

VALVE BOXES FOR VALVES SHALL BE TYLER-UNION FOUNDRY DOMESTIC #461-S, FINE GRAIN CAST IRON ROADWAY BOXES WITH A 5-1/4" SHAFT, ADJUSTABLE HEIGHT BY SCREWING FOR THE TRENCH DEPTH SPECIFIED ON THE DRAWINGS. BOXES ARE TO BE COMPLETE WITH TOP AND BASE SECTION AND DROP TOP COVER WITH THE WORD 'REUSE" PERMANENTLY CAST IN IT.

BLOW-OFF VALVE ASSEMBLY

THE CONTRACTOR SHALL FURNISH AND INSTALL BLOW-OFF ASSEMBLIES IN THE LOCATIONS SHOWN ON THE DRAWINGS. EACH ASSEMBLY SHALL CONSIST OF A BLOW-OFF BRANCH, 2" EJ FLOWMASTER THREADED MODEL GATE VALVE W/ 2" OPERATING NUT, CAP, FITTINGS, INTER-CONNECTING PIPING AND THRUST BLOCKING. SIZES SHALL BE AS SHOWN IN THE DETAIL DRAWING. PIPE AND FITTINGS SHALL BE AS SPECIFIED IN THE PRECEDING PARAGRAPHS.

NON-POTABLE METER BOX ASSEMBLY

THE CONTRACTOR SHALL FURNISH AND INSTALL METER BOX ASSEMBLIES IN THE LOCATIONS SHOWN ON THE DRAWINGS. EACH ASSEMBLY SHALL INCLUDE AN ANGLE METER VALVE, A U-BRANCH OR Y-BRANCH AS APPLICABLE, A DUAL CHECK VALVE OR DOUBLE CHECK VALVE AS APPLICABLE, AND A WATER METER BOX.

ACCEPTABLE MANUFACTURERS SHALL BE:
DUAL BOX - DFW ROTEC #39F PURPLE COMPLETE W/ CI READER
SINGLE BOX - DFW ROTEC #36F PURPLE COMPLETE W/ CI READER

ALL WATER METERS WILL BE INSTALLED BY THE CITY.

PIPE LAYING

THE APPROXIMATE LOCATION OF THE WATER LINES WILL BE STAKED IN THE FIELD BY THE SURVEYOR, BUT INSTALLATION OF THE WATER LINE WILL BE ROUTED AROUND ANY AND ALL TREES, ROOTS AND OTHER OBSTRUCTIONS ON LINE.

UNLESS SPECIFICALLY DESIGNATED ON THE DRAWINGS, OR SO ORDERED BY THE ENGINEER, THE PIPE SHALL BE BURIED TO A DEPTH TO OBTAIN AT LEAST 48" OF COVER.

BEFORE THE PIPE IS LAID IN THE TRENCH THE EARTH FORMING THE BED SHALL BE CAREFULLY FREED OF ALL STONES, ROOTS, ETC. THE BOTTOM OF THE TRENCH WILL BE EXCAVATED BY HAND AND A FIRM FULL-LENGTH SUPPORT FORMED FOR ALL PIPE, VALVES AND FITTINGS. THE PIPE SHALL BE LAID BY SNAKING IN THE TRENCH.

PREPARATORY TO MAKING PIPE JOINTS ALL SURFACES OF THE PORTIONS OF THE PIPE AND JOINTING MATERIAL TO BE JOINED SHALL BE CLEAN AND DRY. FOR THE INSTALLATION OF PIPE WITH THE "COMPRESSION RING" FITTING, A BELL RING LUBRICANT SHALL BE APPLIED TO THE BEVELED PORTION OF THE SPIGOT END. SUCH LUBRICANT SHALL BE OF THE TYPE AND QUALITY AS RECOMMENDED BY THE PIPE MANUFACTURER. CARE SHALL BE EXERCISED TO INSURE THAT THE COMPRESSION RING IS PROPERLY SEATED AND THE PIPE IS COMPLETELY INSERTED SO THAT THE REFERENCE MARKS ON THE SPIGOT END CAN JUST BE SEEN.

THRUST BLOCKS SHALL BE PROVIDED AT ALL POINTS WHERE THE LINE BENDS GREATER THAN 10° AND AT ALL WYES, TEES, CAPS, VALVES, HYDRANTS AND REDUCERS.

AT THE END OF EACH WORK DAY AND/OR WHEN THE PIPE IS LEFT OPEN FOR LONG PERIODS, ALL OPEN ENDS OF THE PIPE WILL BE SUFFICIENTLY COVERED TO PREVENT ENTRANCE OF TRASH OR WILDLIFE.

ANY LENGTH OF PIPE THAT HAS BEEN REJECTED BY THE ENGINEER WILL BE PROMPTLY REMOVED FROM THE JOB SITE OR DESTROYED.

CONNECTIONS WILL BE MADE TO THE EXISTING AND/OR CONSTRUCTED FACILITIES IN ACCORDANCE WITH STANDARD PLUMBING PRACTICE. ANY CONNECTIONS MADE BETWEEN ANY WATER PIPE AND ANY OTHER TUBE PIPE SHALL BE MADE USING CONNECTORS AND ADAPTERS DESIGNED FOR THE PURPOSE OF CONNECTING THE TWO TYPES OF PIPE.

SINGLE AND MULTIPLE SERVICES SHALL BE AS SPECIFIED AND SHALL BE MADE BY INSTALLING A DOUBLE STRAP SADDLE OF THE APPROPRIATE SIZE FOR THE MATERIAL USED AND A CTS THREAD ADAPTER DESIGNED FOR USE WITH THE POLYETHYLENE PIPE. THE POLYETHYLENE PIPE SHALL THEN BE INSTALLED TO THE PROPER ALIGNMENT AND DEPTH AND CONNECTED TO THE METER BOX ASSEMBLY WITH A COMPRESSION TYPE ADAPTER DESIGNED FOR USE WITH PE TUBING.

VALVE BOXES SHALL BE SET TO CONFORM ACCURATELY TO THE FINISHED PAVEMENT SURFACE. ALL ADJUSTMENTS REQUIRED FOR GRADE SHALL BE DONE AFTER ALL BASE CONSTRUCTION HAS BEEN COMPLETED. IMMEDIATELY BEFORE THE PLACEMENT OF THE FINAL ASPHALT SURFACE COURSE, THE VALVE SHALL BE UNCOVERED AND THE VALVE BOX SO PLACED AS TO ACCURATELY MEET THE FINISHED PAVEMENT GRADE. THE AREA EXCAVATED IN THE LIMEROCK BASE COURSE TO ALLOW FOR ADJUSTMENT OF THE VALVE BOX TO GRADE SHALL BE BACKFILLED WITH LIMEROCK AND COMPACTED TO THE SAME DENSITY AS THE LIMEROCK BASE COURSE.

ANY PIPE INSTALLED AND SUBSEQUENTLY REMOVED SHALL NOT BE REINSTALLED AND SHALL IMMEDIATELY BE REMOVED FROM THE JOB SITE.

CLEARANCE REQUIREMENTS

WHEN A RECLAIMED WATER/NON-POTABLE IRRIGATION LINE IS TRANSPORTING WATER FOR PUBLIC ACCESS IRRIGATION OR FIRE PROTECTION, THE MAXIMUM OBTAINABLE SEPARATION OF RECLAIMED WATER/NON-POTABLE IRRIGATION LINES AND POTABLE WATER LINES SHALL BE PRACTICED. MINIMUM SEPARATION REQUIREMENTS ARE SPECIFIED UNDER POTABLE WATER.

TESTING

AFTER THE PIPE HAS BEEN CONNECTED AND LAID IN THE TRENCHES, ENOUGH BACKFILL BETWEEN JOINTS WILL BE MADE TO INSURE THE ANCHORAGE OF THE PIPE IN THE TRENCH AND THE LINES PRESSURE TESTED. THE CONTRACTOR SHALL FILL THE LINE WITH WATER AND INSTALL THE NECESSARY FIXTURES, PUMPS, GAUGES, ETC. TO SUBJECT THE LINES TO A HYDROSTATIC GAUGE PRESSURE OF 150 PSI.

EACH INDIVIDUAL BRANCH LINE OF LOOP SHALL BE SUBJECTED TO THE 150 PSI PRESSURE AND MAINTAINED FOR AT LEAST 15 MINUTES WITH NO LOSS OF PRESSURE. ANY DEFECTS OR LEAKS REVEALED WILL BE LOCATED AND REPAIRED AND ANOTHER PRESSURE TEST RUN BEFORE BACKFILLING.

AFTER THE TESTING OF THE INDIVIDUAL BRANCH LINES, THOSE PORTIONS OF THE LINE WILL BE APPROVED FOR BACKFILL, BUT THE JOINTS WHERE EACH BRANCH LINE CONNECTS TO A MAIN OR ANOTHER BRANCH LINE SHALL REMAIN OPEN. AFTER TESTING OF ALL BRANCH LINES AND THE COMPLETE CONNECTION OF THE ENTIRE DISTRIBUTION SYSTEM, A PRESSURE TEST WILL BE RUN ON THE ENTIRE SYSTEM. A PRESSURE OF 150 PSI WILL BE PUT ON THE SYSTEM AND WILL BE MAINTAINED FOR AT LEAST 2 HOURS WITH NO LOSS IN PRESSURE IN ACCORDANCE WITH THE PROCEDURES SPECIFIED IN AWWA MANUAL NO. 23. AFTER THE SYSTEM MAINTAINS THE TEST PRESSURE, THE ENTIRE SYSTEM MAY BE BACKFILLED.

ALL NON-POTABLE WATER DISTRIBUTION SYSTEM PRESSURE TESTING SHALL BE COMPLETED A MINIMUM OF 30 DAYS PRIOR TO THE SUBSTANTIAL COMPLETION DATE OR AS REQUIRED BY THE CITY ENGINEER.

BACKFILLING

TRENCHES SHALL BE BACKFILLED WITH THE EXCAVATED MATERIALS FROM WHICH LARGE CLODS OR STONES HAVE BEEN REMOVED AND SHALL BE CAREFULLY DEPOSITED IN LAYERS NOT TO EXCEED 12" AND THOROUGHLY AND CAREFULLY RAMMED UNTIL ENOUGH FILL HAS BEEN PLACED TO PROVIDE A COVER OF NOT LESS THAN 2' ABOVE THE PIPE. THE REMAINDER OF THE BACKFILL MATERIAL MAY THEN BE PLACED AND SHOULD BE MOISTENED AND TAMPED TO INSURE PROPER COMPACTION.

BACKFILL SHALL NOT BE PLACED OVER ANY PLASTIC PIPE WHILE IT IS IN A HEATED CONDITION. BEFORE BACKFILLING THE PIPE, THE TEMPERATURE SHALL BE BROUGHT TO THE APPROXIMATE TEMPERATURE OF THE GROUND EITHER BY RUNNING WATER THROUGH IT OR BY BACKFILLING IN THE EARLY MORNING WHEN THE PIPE AND GROUND ARE AT THE SAME TEMPERATURE.

WHENEVER THE TRENCHES HAVE NOT BEEN PROPERLY FILLED, OR IF SETTLEMENT OCCURS, THEY SHALL BE REFILLED, COMPACTED, SMOOTHED OFF, AND FINALLY MADE TO CONFORM TO THE SURFACE OF THE GROUND. BACKFILL IN OPEN TRENCHES ACROSS ROADWAYS OR OTHER AREAS WHICH ARE TO BE REPAVED SHALL BE MADE AS SPECIFIED ABOVE EXCEPT THAT THE ENTIRE FILL ABOVE PIPE SHALL BE DEPOSITED IN LAYERS NOT TO EXCEED 12" IN THICKNESS, MOISTENED AND COMPACTED TO 98% OF MAXIMUM DENSITY AS DETERMINED BY AASHTO T-180 SO THAT WHEN BACKFILLING IS COMPLETED, THE ROADWAY PAVING MAY BE PLACED IMMEDIATELY.

PLUMBING CODE

ALL PIPING AND RELATED FITTING SHALL BE INSTALLED ACCORDING TO THE PLUMBING CODE OF THE STATE OF FLORIDA, LOCAL AUTHORITIES AND MANUFACTURER'S RECOMMENDATIONS. WHEREVER THESE SPECIFICATIONS AND/OR DRAWINGS EXCEED THE REQUIREMENTS OF SAID CODES, THESE DOCUMENTS TAKE PRECEDENCE. THE PIPING MUST BE INSTALLED IN A STRONG, NEAT AND WORKMANLIKE MANNER, SUBJECT TO THE RESTRICTIONS INDICATED.

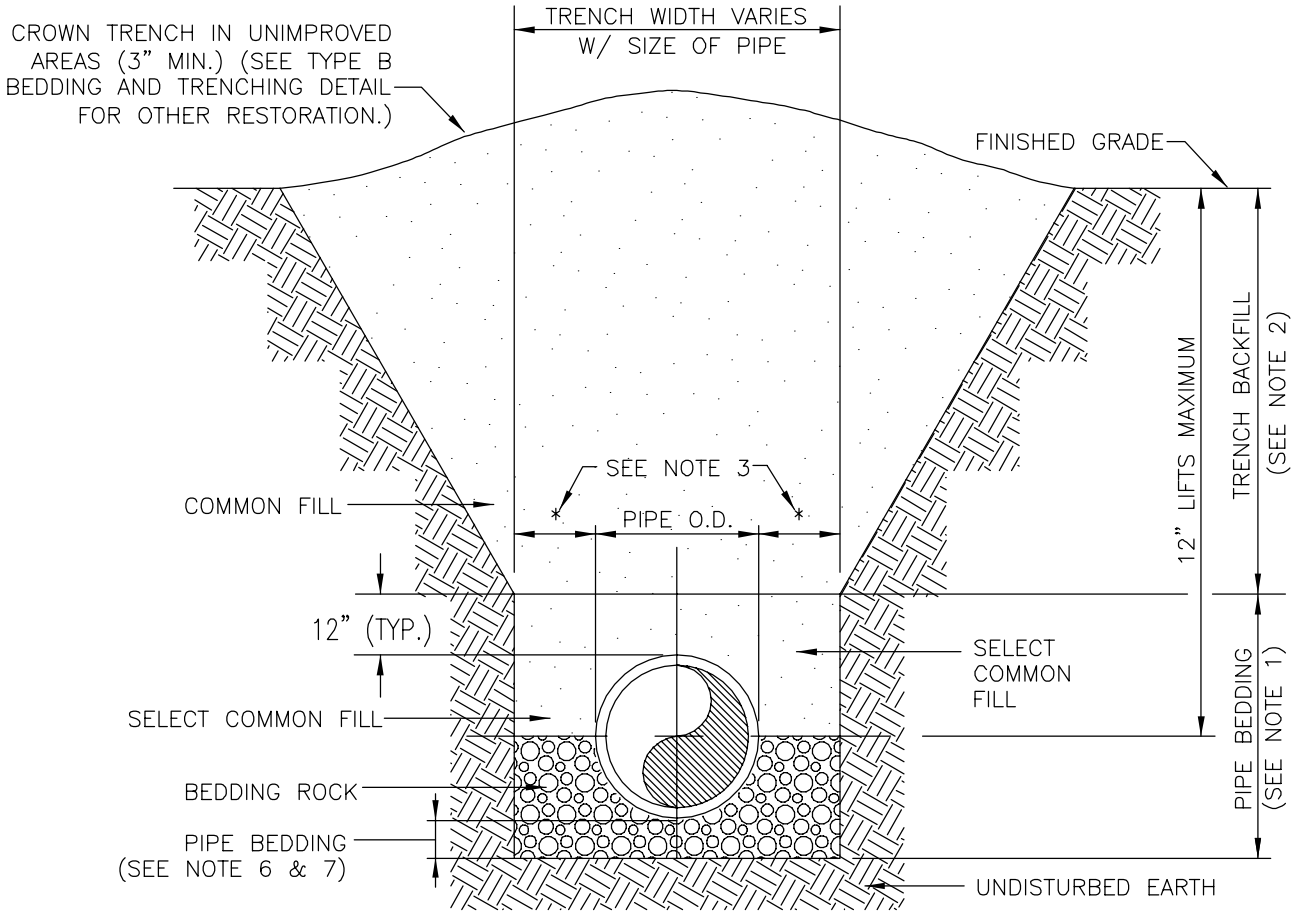


NOTES:

1. PIPE BEDDING: SELECT COMMON FILL COMPACTED TO 95% OF THE MAXIMUM DENSITY AS PER AASHTO T-180.
2. TRENCH BACKFILL: COMMON FILL COMPACTED TO 95% (98% UNDER ROADWAYS) OF THE MAXIMUM DENSITY AS PER AASHTO T-180.
3. (*): 15" MAX. FOR PIPE DIAMETER LESS THAN 24", AND 24" MAX. FOR PIPE DIAMETER 24" AND LARGER.
4. WATER SHALL NOT BE PERMITTED IN THE TRENCH DURING CONSTRUCTION.
5. ALL PIPE TO BE INSTALLED WITH BELL FACING UPSTREAM TO THE DIRECTION OF THE FLOW.
6. WHEN REQUIRED BY THE ENGINEER, GRAVITY SEWERS SHALL UTILIZE TYPE A BEDDING. BEDDING DEPTH SHALL BE 4" MINIMUM FOR PIPE DIAMETER LESS THAN 15", AND 6" MINIMUM FOR PIPE DIAMETER 16" AND LARGER.
7. DEPTH FOR REMOVAL OF UNSUITABLE MATERIAL SHALL GOVERN DEPTH OF BEDDING ROCK BELOW THE PIPE. THE REQUIRED REMOVAL OF UNSUITABLE MATERIAL TO REACH SUITABLE FOUNDATION WILL BE DETERMINED IN THE FIELD BY THE ENGINEER.

| | | | | |
|---|---|---|---|---|
| CITY OF WILDWOOD<br>100 NORTH MAIN STREET<br>WILDWOOD, FLORIDA 34785<br>(352) 330-1330 | SCALE<br>NONE<br>LATEST REVISION<br>01-04-12 | CITY OF WILDWOOD WATER DETAIL<br>TYPE A<br>BEDDING AND TRENCHING DETAIL | DETAIL NUMBER<br>W-03<br>1 OF 1 |

Drawing name: G:\Cities and Counties\Wildwood\Standard Details\WATER\W-03 Bedding Type A.dwg Model Nov 10, 2014 5:35pm by: Kevin.Vickers

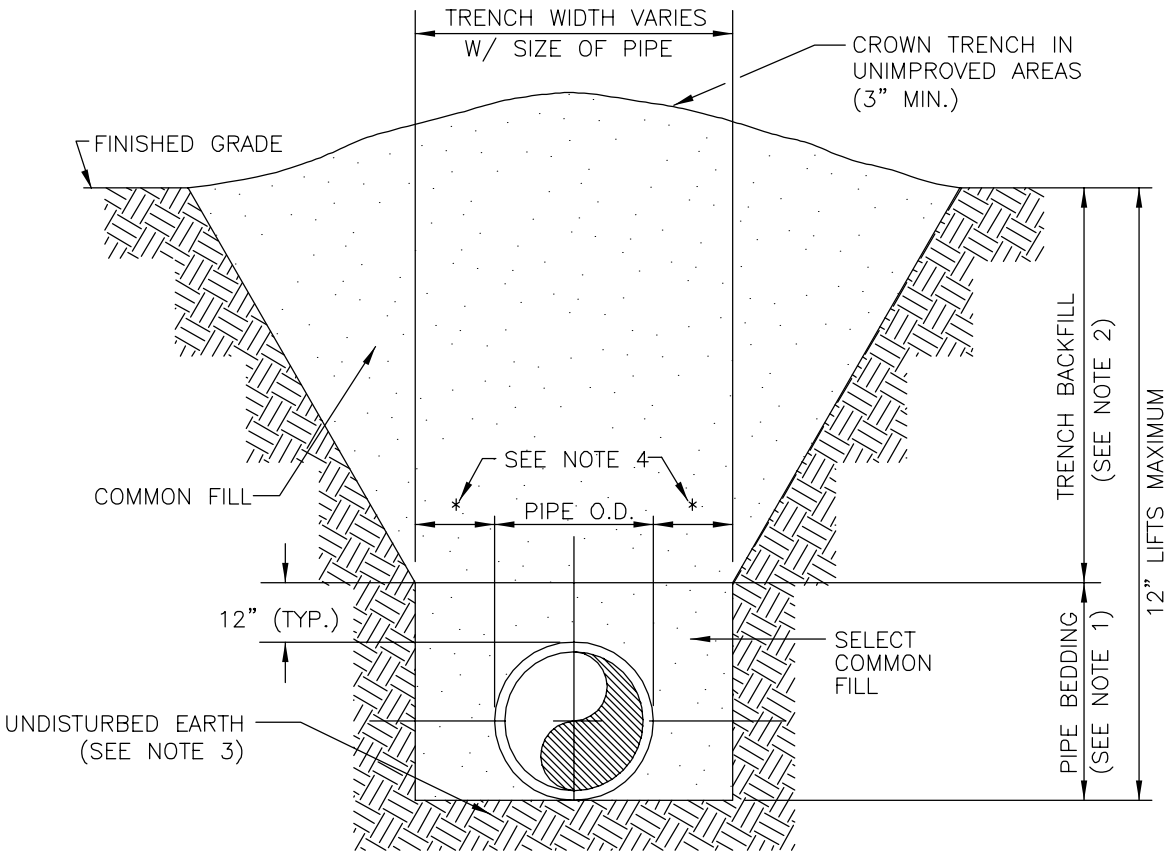


NOTES:

1. PIPE BEDDING: SELECT COMMON FILL COMPACTED TO 95% OF THE MAXIMUM DENSITY AS PER AASHTO T-180.

2. TRENCH BACKFILL: COMMON FILL COMPACTED TO 95% (98% UNDER ROADWAYS) OF THE MAXIMUM DENSITY AS PER AASHTO T-180.

3. PIPE BEDDING UTILIZING SELECT COMMON FILL OR BEDDING ROCK IN ACCORDANCE WITH TYPE A BEDDING AND TRENCHING DETAIL MAY BE REQUIRED AS DIRECTED BY THE ENGINEER.

4. (*): 15" MAX. FOR PIPE DIAMETER LESS THAN 24", AND 24" MAX. FOR PIPE DIAMETER 24" AND LARGER.

5. WATER SHALL NOT BE PERMITTED IN THE TRENCH DURING CONSTRUCTION.

6. ALL PIPE TO BE INSTALLED WITH BELL FACING UPSTREAM TO THE DIRECTION OF THE FLOW.

7. FINAL RESTORATION SHALL BE IN COMPLIANCE WITH ALL APPLICABLE REGULATIONS OF GOVERNING AGENCIES.

| | | | | |
|---|---|---|---|---|
| CITY OF WILDWOOD<br>100 NORTH MAIN STREET<br>WILDWOOD, FLORIDA 34785<br>(352) 330-1330 | SCALE<br>NONE<br>LATEST REVISION<br>01-04-12 | CITY OF WILDWOOD WATER DETAIL<br>TYPE B<br>BEDDING AND TRENCHING DETAIL | DETAIL NUMBER<br>W-04<br>1 OF 1 |

Drawing name: G:\Cities and Counties\Wildwood\Standard Details\WATER\W-04 Bedding Type B.dwg Model Nov 10, 2014 5:36pm by: Kevin.Vickers

LOCATION OF PUBLIC WATER SYSTEM MAINS IN ACCORDANCE WITH F.A.C. RULE 62-555.314

| OTHER PIPE | HORIZONTAL SEPARATION | CROSSINGS (1) | JOINT SPACING @ CROSSINGS (FULL JOINT CENTERED) |
|---|---|---|---|
| STORM SEWER, STORMWATER FORCE MAIN, RECLAIMED WATER (2) | 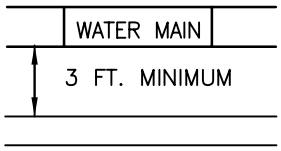  | 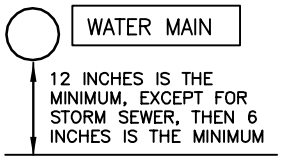  | ALTERNATE 3 FT. MINIMUM 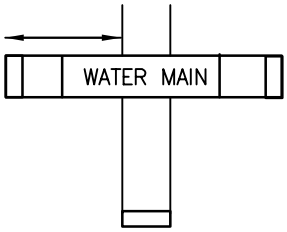  |
| VACUUM SANITARY SEWER | 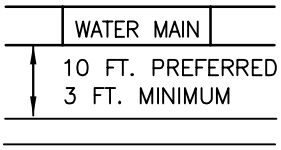  | 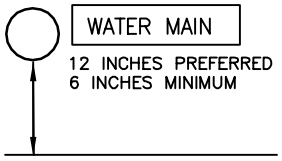  | ALTERNATE 3 FT. MINIMUM 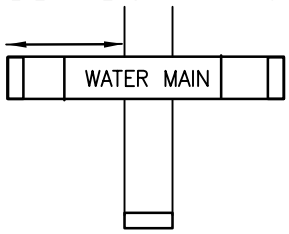  |
| GRAVITY OR PRESSURE SANITARY SEWER, SANITARY SEWER FORCE MAIN, RECLAIMED WATER (4) | 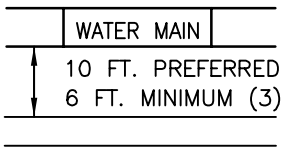  | 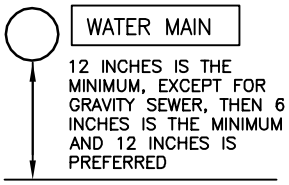  | ALTERNATE 6 FT. MINIMUM 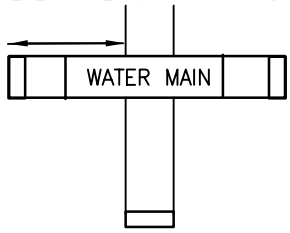  |
| ON-SITE SEWAGE TREATMENT & DISPOSAL SYSTEM | 10 FT. MINIMUM | | |

NOTES

1. WATER MAIN SHOULD CROSS ABOVE OTHER PIPE. WHEN WATER MAIN MUST BE BELOW OTHER PIPE, THE MINIMUM SEPARATION IS 12 INCHES.
2. RECLAIMED WATER REGULATED UNDER PART III OF CHAPTER 62-610, F.A.C.
3. 3 FT. FOR GRAVITY SANITARY SEWER WHERE THE BOTTOM OF THE WATER MAIN IS LAID AT LEAST 6 INCHES ABOVE THE TOP OF THE GRAVITY SANITARY SEWER.
4. RECLAIMED WATER NOT REGULATED UNDER PART III OF CHAPTER 62-610, F.A.C.

DI FITTING RESTRAINTS:
TYLER–UNION 1000 TUF GRIP
OR
EBBA SERIES 1100 MEGALUG

DI PIPE BELL RESTRAINTS:
EBBA SERIES 1700 SPLIT BELL RESTRAINT

PVC C900 FITTING RESTRAINTS:
TYLER–UNION 2000 TUF GRIP
OR
EBBA SERIES 2000 MEGALUG

PVC PIPE BELL RESTRAINTS:
TYLER SERIES 3000 SPLIT BELL RESTRAINT
OR
EBBA SERIES 1900 SPLIT BELL RESTRAINT

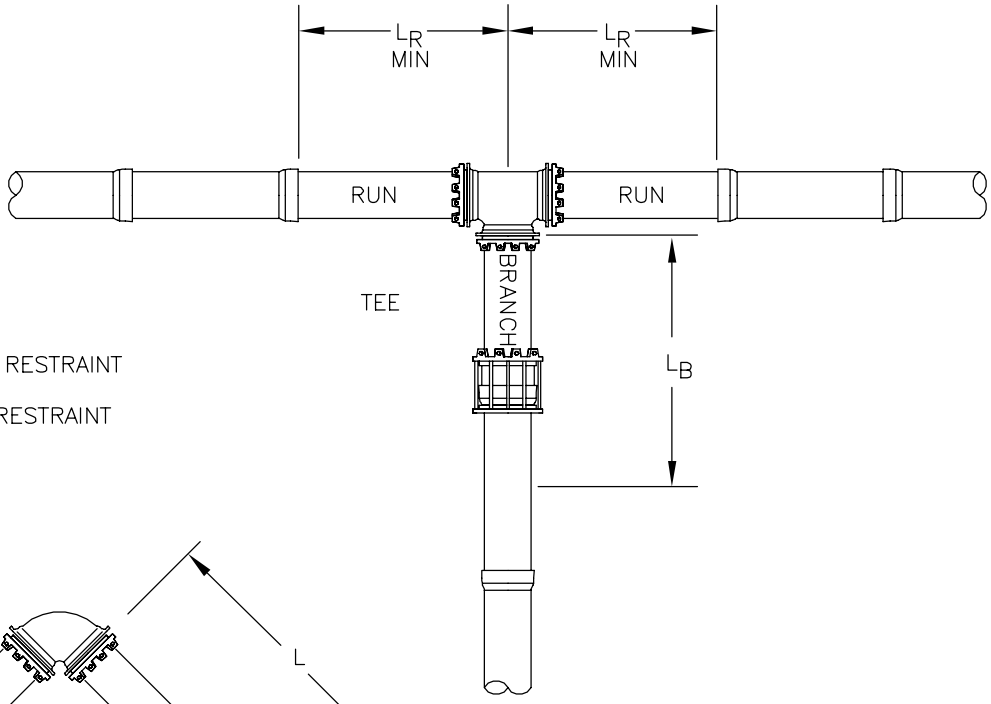


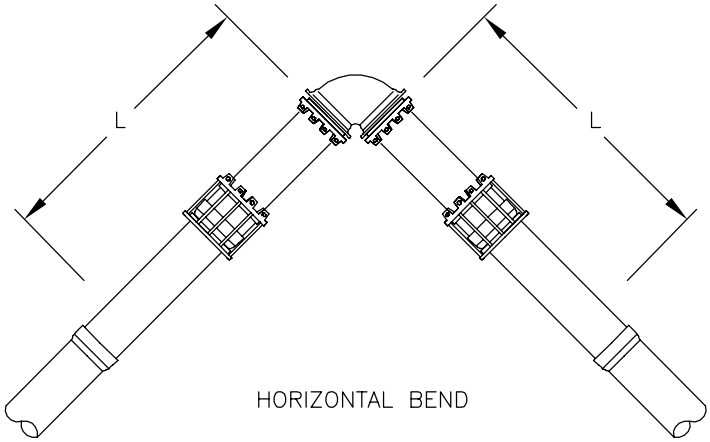


ALL JOINTS WITHIN LENGTH "L" OF FITTING MUST BE RESTRAINED.

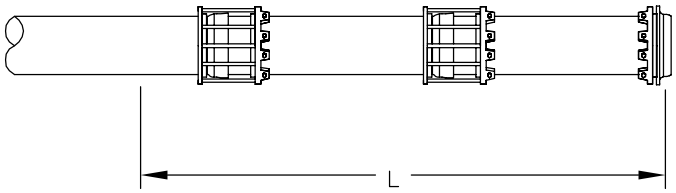


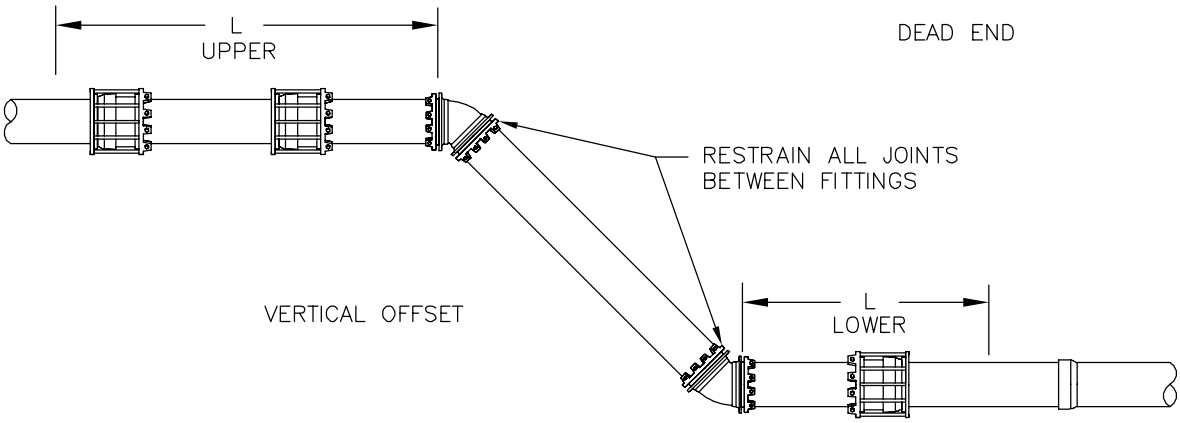


| | | | | |
|---|---|---|---|---|
| CITY OF WILDWOOD<br>100 NORTH MAIN STREET<br>WILDWOOD, FLORIDA 34785<br>(352) 330–1330 | SCALE<br>NONE<br>LATEST REVISION<br>11–10–14 | CITY OF WILDWOOD WATER DETAIL<br>MECHANICAL JOINT RESTRAINTS | DETAIL NUMBER<br>W-06<br>1 OF 2 |

Drawing name: G:\Cities and Counties\Wildwood\Standard Details\WATER\W-06.1 Mechanical Joint Restraints.dwg Model Nov 10, 2014 5:37pm by: Kevin.Vickers

## MINIMUM LENGTH OF PIPE "L" (FEET) TO BE RESTRAINED

(SOURCES: EBBA IRON RESTRAINT LENGTH CALCULATION PROGRAM FOR PVC PIPE, RELEASE 3.1, AND DIPRA THRUST RESTRAINT FOR DUCTILE IRON PIPE, RELEASE 3.2)

| FITTING TYPE | | PIPE SIZE | | | | | | |
|---|---|---|---|---|---|---|---|---|
| | | 4" | 6" | 8" | 10" | 12" | 14" | 16" |
| 90° HORIZ. BEND | | 17 | 24 | 31 | 37 | 43 | 49 | 55 |
| 45° HORIZ. BEND | | 7 | 10 | 13 | 15 | 18 | 20 | 23 |
| 22.5° HORIZ. BEND | | 3 | 5 | 6 | 7 | 9 | 10 | 11 |
| 11.25° HORIZ. BEND | | 2 | 2 | 3 | 4 | 5 | 5 | 6 |
| 45° VERT. OFFSET | UPPER BEND | 16 | 22 | 29 | 34 | 41 | 46 | 52 |
| | LOWER BEND | 7 | 10 | 13 | 15 | 18 | 20 | 23 |
| 22.5° VERT. OFFSET | UPPER BEND | 7 | 12 | 15 | 17 | 20 | 22 | 25 |
| | LOWER BEND | 3 | 5 | 6 | 7 | 9 | 10 | 11 |
| 11.25° VERT. OFFSET | UPPER BEND | 4 | 5 | 7 | 8 | 11 | 12 | 14 |
| | LOWER BEND | 2 | 2 | 3 | 4 | 4 | 5 | 7 |
| PLUG (DEAD END) | | 38 | 53 | 69 | 83 | 98 | 112 | 129 |
| VALVE | | 38 | 53 | 69 | 83 | 98 | 112 | 129 |
| TEE (BRANCH REST.) | 4"X * | 19 | – | – | – | – | – | – |
| | 6"X * | 10 | 35 | – | – | – | – | – |
| | 8"X * | 1 | 28 | 51 | – | – | – | – |
| | 10"X * | 1 | 28 | 46 | 64 | – | – | – |
| | 12"X * | 1 | 15 | 40 | 60 | 79 | – | – |
| | 14"X * | 1 | 8 | 35 | 56 | 75 | 92 | – |
| | 16"X * | 1 | 1 | 29 | 51 | 71 | 90 | 106 |
| REDUCER (LARGER PIPE RESTRAINT) | 6"X * | 27 | – | – | – | – | – | – |
| | 8"X * | 50 | 29 | – | – | – | – | – |
| | 10"X * | 68 | 51 | 28 | – | – | – | – |
| | 12"X * | 85 | 71 | 52 | 48 | – | – | – |
| | 14"X * | 101 | 89 | 73 | 69 | 29 | – | – |
| | 16"X * | 117 | 106 | 92 | 89 | 54 | 29 | – |

NOTES:

1. THE DATA IN THE ABOVE TABLE ARE BASED UPON THE FOLLOWING INSTALLATION CONDITIONS:

   SOIL TYPE – SP  TRENCH TYPE – 3  TEST PRESSURE – 150 PSI
   SAFETY FACTOR – 1.5  DEPTH OF BURY – 3'  VERTICAL OFFSET – 3'

2. THE RESTRAINED PIPE LENGTHS APPLY TO DUCTILE IRON AND PVC PIPE.
3. ALL JOINTS BETWEEN UPPER AND LOWER BENDS SHALL BE RESTRAINED.
4. RESTRAINED PIPE LENGTHS FOR VALVES APPLY TO PIPE ON BOTH SIDES OF VALVES.
5. THIS TABLE IS FOR SP SOILS. THE ENGINEER IS TO BE NOTIFIED IF OTHER TYPE SOILS ARE ENCOUNTERED.
6. ALL PIPES SHALL BE RESTRAINED PER THE LENGTHS AS CALLED FOR IN THE ABOVE REFERENCED TABLE. THE COSTS FOR THESE RESTRAINED JOINTS SHALL BE CONSIDERED INCIDENTAL TO THE COST OF THE PIPE.
7. ANY CALL OUTS AS NOTED ON THE PLANS FOR "TUF GRIP" RESTRAINTS OR "MEGALUGS" ARE IN ADDITION TO THOSE AS NOTED AND CALLED FOR IN THE ABOVE TABLE.

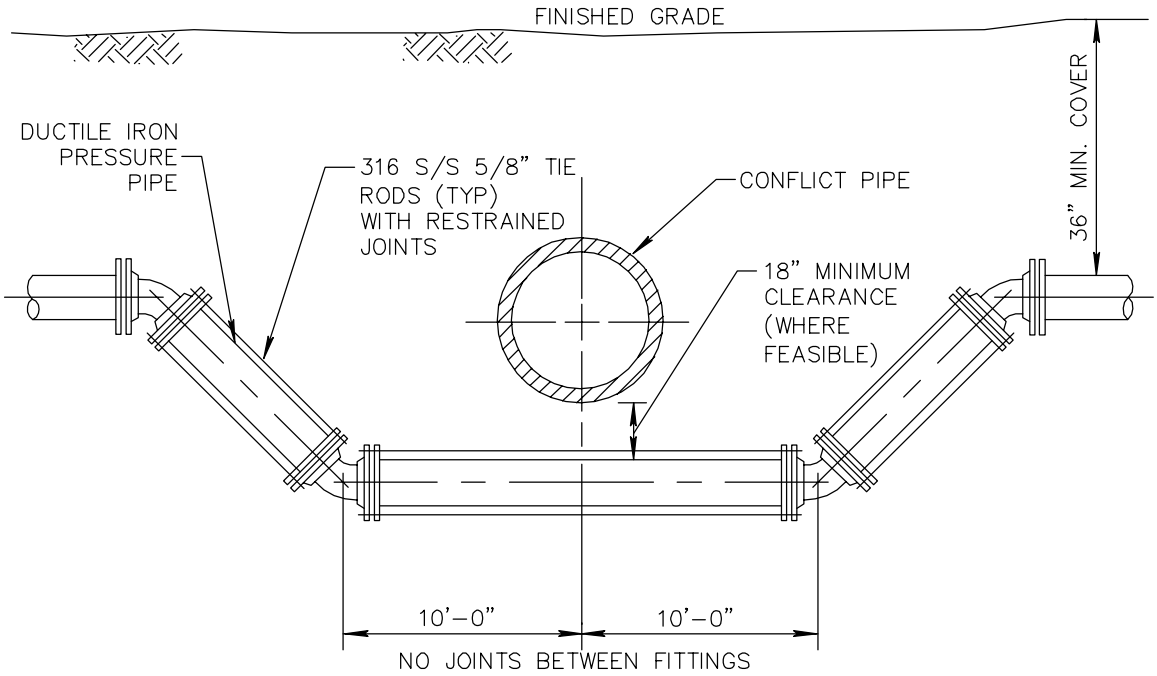


## FITTING TYPE

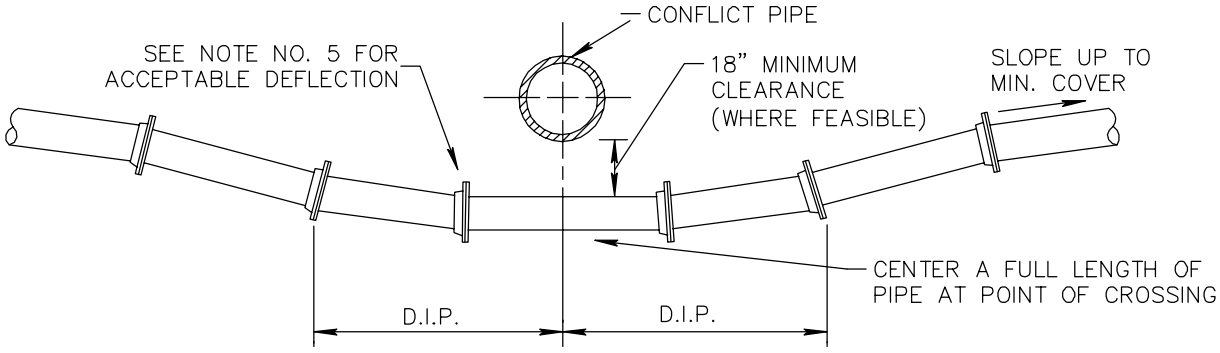


## DEFLECTION TYPE

NOTES

1. THERE SHALL BE IN ALL CASES A MINIMUM OF 18" VERTICAL SEPARATION BETWEEN WATER MAINS AND FORCE MAINS.
2. WHEREVER POSSIBLE WATER MAINS SHALL PASS OVER FORCE MAINS OR STORM SEWERS.
3. FITTINGS SHALL BE RESTRAINED WITH TUF GRIP OR MEGALUG RESTRAINTS
4. THE DEFLECTION TYPE CROSSING IS PREFERRED.
5. DO NOT EXCEED 75% OF MANUFACTURERS RECOMMENDED MAXIMUM JOINT DEFLECTION.
6. REFER TO TYPICAL RESTRAINING DETAIL W-06

| | | | | |
|---|---|---|---|---|
| CITY OF WILDWOOD<br>100 NORTH MAIN STREET<br>WILDWOOD, FLORIDA 34785<br>(352) 330-1330 | SCALE<br>NONE<br>LATEST REVISION<br>11-13-14 | CITY OF WILDWOOD WATER DETAIL<br>WATER/ SEWER PIPE CONFLICT DETAIL | DETAIL NUMBER<br>W-07<br>1 OF 1 |

Drawing name: G:\Cities and Counties\Wildwood\Standard Details\WATER\W-07 Water Main Bypass.dwg Model Nov 13, 2014 1:50pm by: Kevin.Vickers

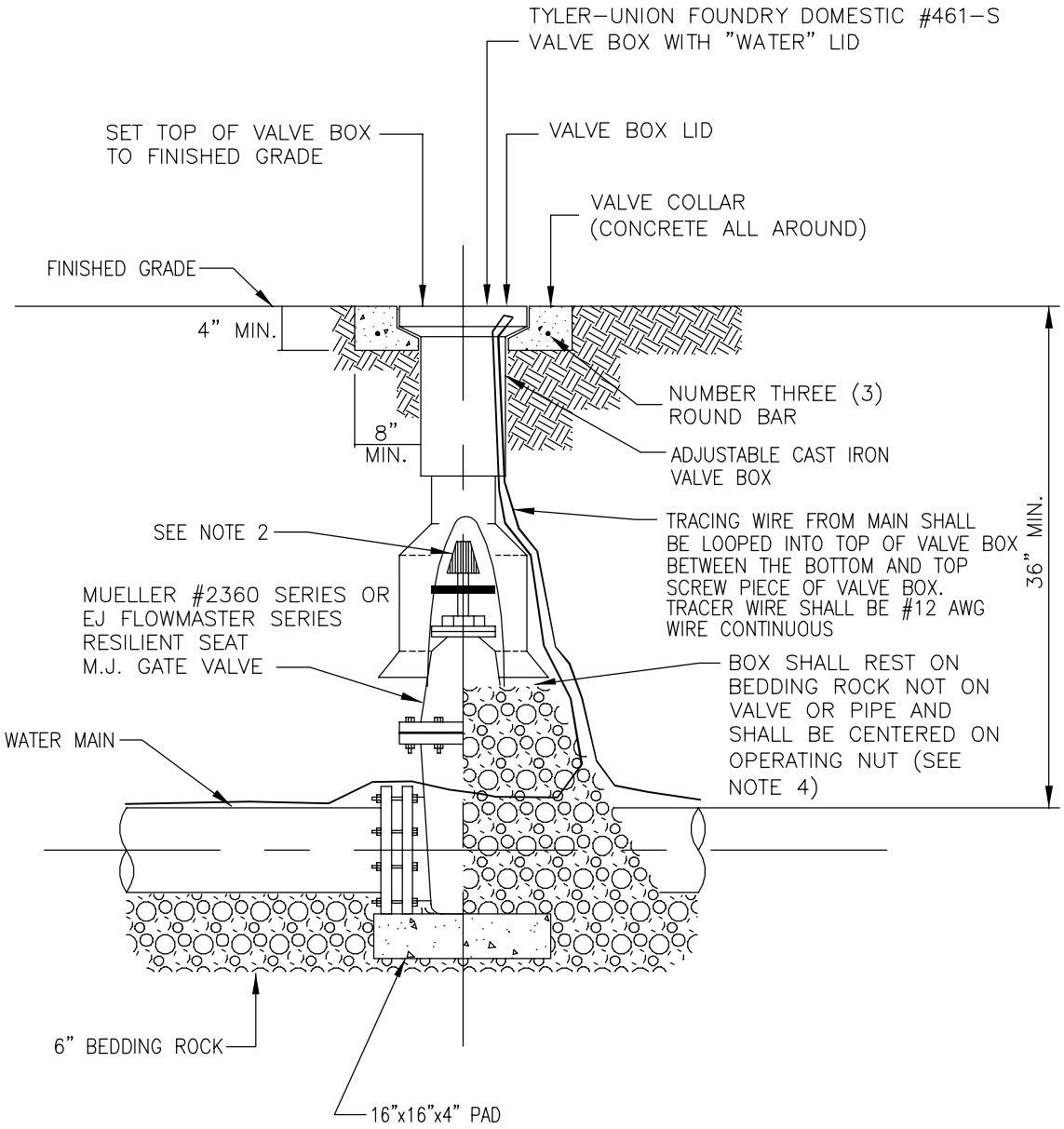


NOTES:

1. PVC EXTENSIONS SHALL NOT BE USED ON VALVE BOX INSTALLATION.
2. THE ACTUATING NUT FOR DEEPER VALVES SHALL BE EXTENDED TO 4 FOOT DEPTH BELOW FINISHED GRADE.
3. GATE VALVES SHALL BE USED WITH ALL WATER MAINS UP TO TWELVE (12) INCHES, BUTTERFLY VALVES SHALL BE USED FOR ALL LARGER SIZES.
4. WHEN VALVE BOX IS TO BE INSTALLED IN ROADWAY OR OTHER TRAFFIC AREAS SET VALVE BOX ON FIVE (5) SOLID BRICKS.

| | | | | |
|---|---|---|---|---|
| CITY OF WILDWOOD<br>100 NORTH MAIN STREET<br>WILDWOOD, FLORIDA 34785<br>(352) 330–1330 | SCALE<br>NONE<br>LATEST REVISION<br>11–17–14 | CITY OF WILDWOOD WATER DETAIL<br>GATE VALVE AND BOX DETAIL | DETAIL NUMBER<br>W-08<br>1 OF 1 |

Drawing name: G:\Cities and Counties\Wildwood\Standard Details\WATER\W-08 Gate Valve.dwg Model Nov 17, 2014 11:30am by: Kevin.Vickers

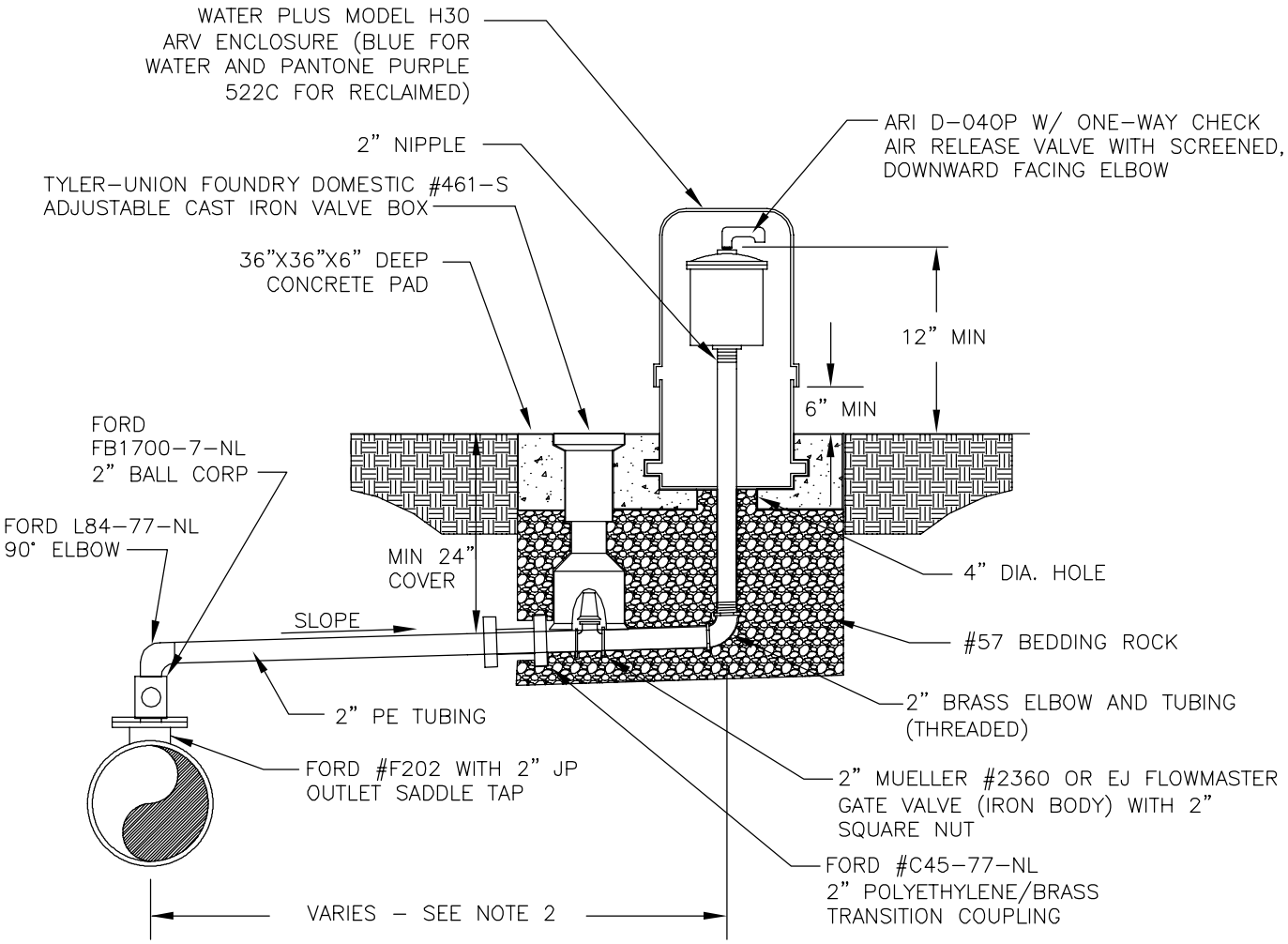


NOTES:

1. FOR WATER OR RECLAIMED USE ONLY.
2. OFFSET DISTANCE TO BE FIELD DETERMINED AND AS CLOSE TO THE RIGHT OF WAY AS POSSIBLE.
3. ADJUST HORIZONTAL POSITION OF SIDEWALK, AS REQUIRED TO AVOID AR ENCLOSURE.
4. LOCATE ARV ENCLOSURE WITHIN 6" OF RIGHT OF WAY

| | | | | |
|---|---|---|---|---|
| CITY OF WILDWOOD<br>100 NORTH MAIN STREET<br>WILDWOOD, FLORIDA 34785<br>(352) 330-1330 | SCALE<br>NONE<br>LATEST REVISION<br>11-10-14 | CITY OF WILDWOOD WATER DETAIL<br>2" AUTOMATIC AIR RELEASE VALVE | DETAIL NUMBER<br>W-09<br>1 OF 1 |

Drawing name: G:\Cities and Counties\Wildwood\Standard Details\WATER\W-09 Air Release Valve-2.dwg Model Nov 10, 2014 5:40pm by: Kevin.Vickers

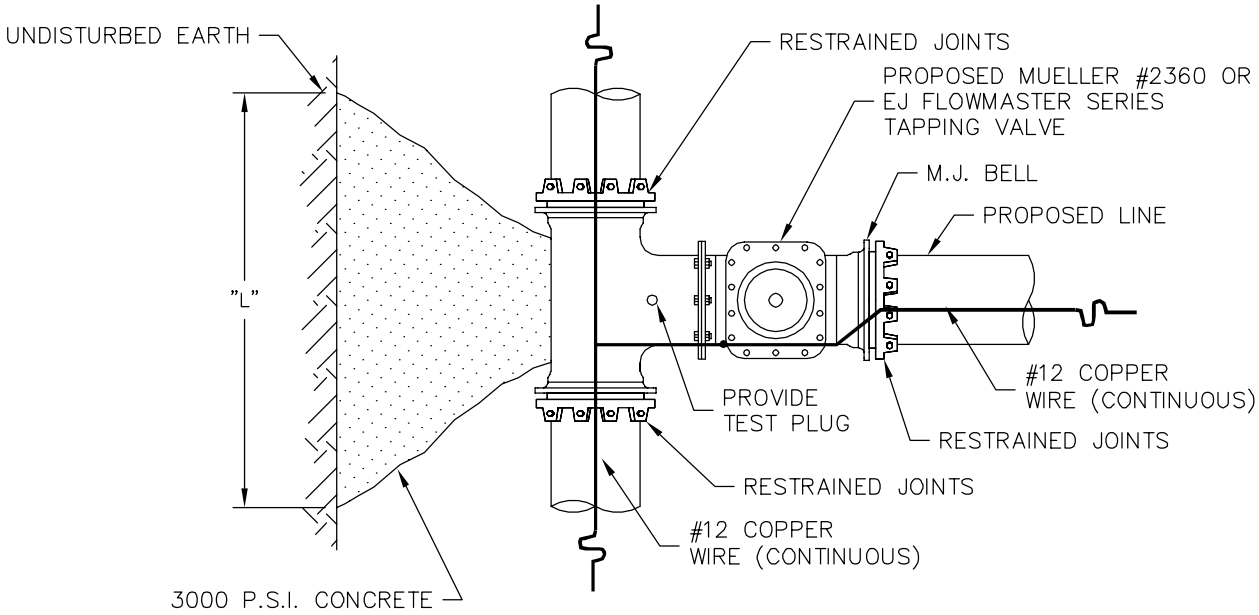


PLAN

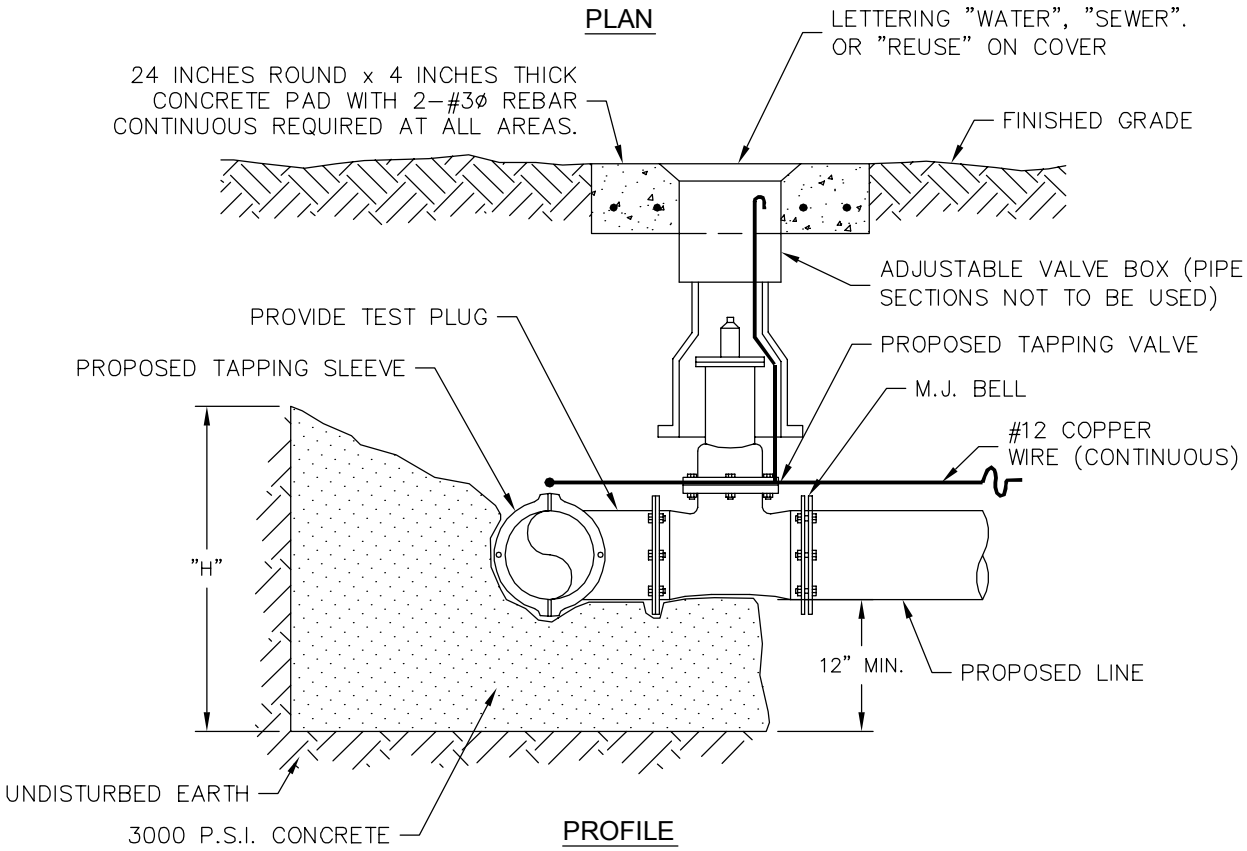


PROFILE

| RUN | BRANCH | | | | | | | | | | | |
|---|---|---|---|---|---|---|---|---|---|---|---|---|
| | 4 INCH | | 6 INCH | | 8 INCH | | 10 INCH | | 12 INCH | | 14 INCH | |
| | L | H | L | H | L | H | L | H | L | H | L | H |
| 4 INCH | 15 | 20 | | | | | | | | | | |
| 6 INCH | 15 | 20 | 23 | 30 | | | | | | | | |
| 8 INCH | 15 | 20 | 23 | 30 | 31 | 39 | | | | | | |
| 10 INCH | 15 | 20 | 23 | 30 | 31 | 39 | 40 | 48 | | | | |
| 12 INCH | 15 | 20 | 23 | 30 | 31 | 39 | 40 | 48 | 48 | 57 | | |
| 16 INCH | 15 | 20 | 23 | 30 | 31 | 39 | 40 | 48 | 48 | 57 | 62 | 78 |
| 18 INCH | 15 | 20 | 23 | 30 | 31 | 39 | 40 | 48 | 48 | 57 | 62 | 78 |
| 20 INCH | 15 | 20 | 23 | 30 | 31 | 39 | 40 | 48 | 48 | 57 | 62 | 78 |
| 24 INCH | 15 | 20 | 23 | 30 | 31 | 39 | 40 | 48 | 48 | 57 | 62 | 78 |
| 30 INCH | 15 | 20 | 23 | 30 | 31 | 39 | 40 | 48 | 48 | 57 | 62 | 78 |

DIMENSIONS ARE INCHES

NOTES:

1. VALVE STEM MAXIMUM DEPTH 36 INCHES TO FINISHED GRADE.
2. VALVE STEM EXTENSION SHALL BE SECURED WITH A STAINLESS STEEL SET SCREW TO THE OPERATING NUT, AND SUPPLIED WITH A STAINLESS STEEL CENTERING RING(S).
3. VALVE BOX RISER SHALL BE SUPPLIED BY VALVE BOX MANUFACTURER. P.V.C. RISER SHALL NOT BE ALLOWED.
4. NO TAP SHALL BE MADE BEFORE A TEST OF 150 P.S.I. FOR 30 MINUTES IS PERFORMED ON THE VALVE AND SLEEVE ASSEMBLY WITH ZERO LOSS, WITH THE VALVE IN THE OPEN POSITION AND PLUGGED OR CAPPED.

CITY OF WILDWOOD
100 NORTH MAIN STREET
WILDWOOD, FLORIDA 34785
(352) 330-1330

SCALE: NONE

LATEST REVISION: 11-10-14

CITY OF WILDWOOD WATER DETAIL

TAPPING SLEEVE AND VALVE

DETAIL NUMBER: W-10



Drawing name: G:\Cities and Counties\Wildwood\Standard Details\WATER\W-10 Tapping Sleeve.dwg Model Nov 10, 2014 5:41pm by: Kevin.Vickers

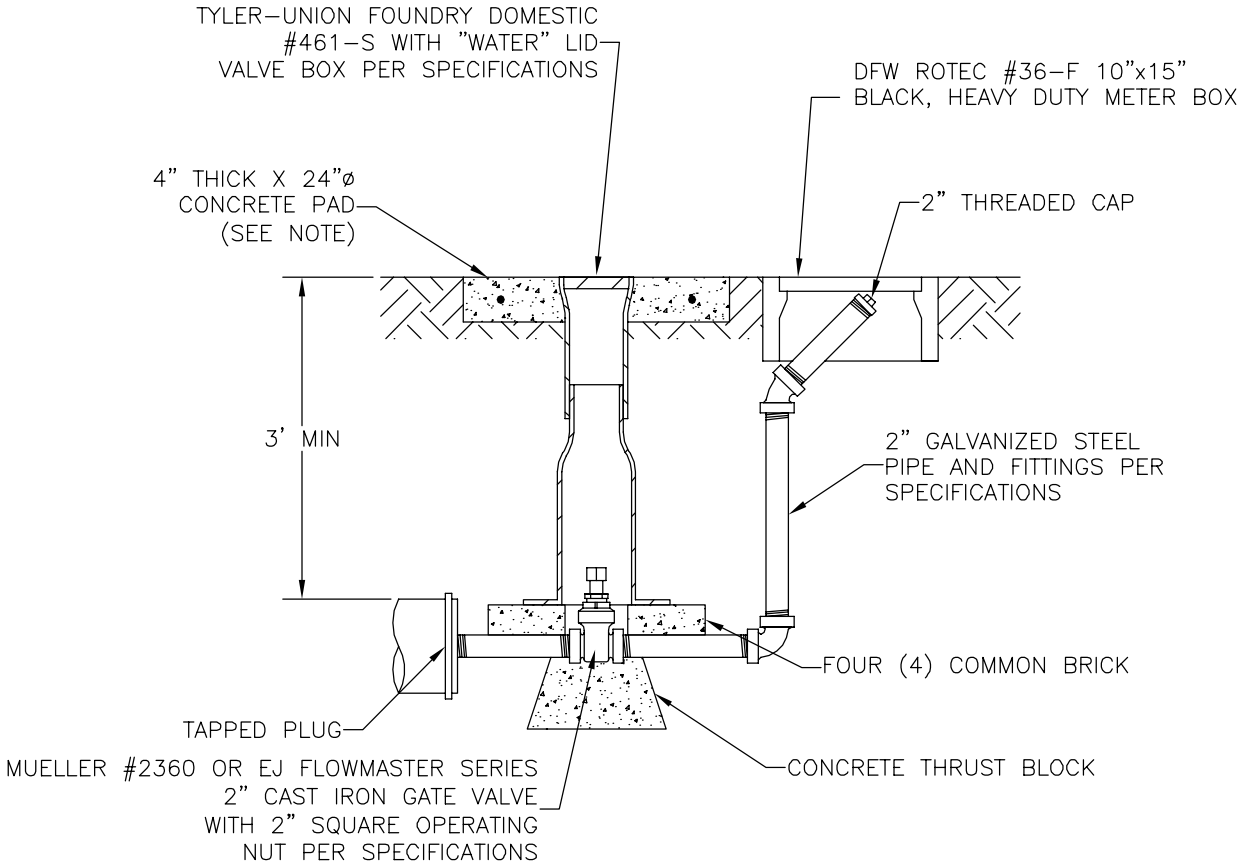


| | | | | |
|---|---|---|---|---|
| CITY OF WILDWOOD<br>100 NORTH MAIN STREET<br>WILDWOOD, FLORIDA 34785<br>(352) 330–1330 | SCALE<br>NONE<br>LATEST REVISION<br>11–10–14 | CITY OF WILDWOOD WATER DETAIL<br>2" BLOW-OFF | DETAIL NUMBER<br>W-11<br>1 OF 1 |

Drawing name: G:\Cities and Counties\Wildwood\Standard Details\WATER\W-11 Blow Off-2.dwg Model Nov 10, 2014 5:42pm by: Kevin.Vickers

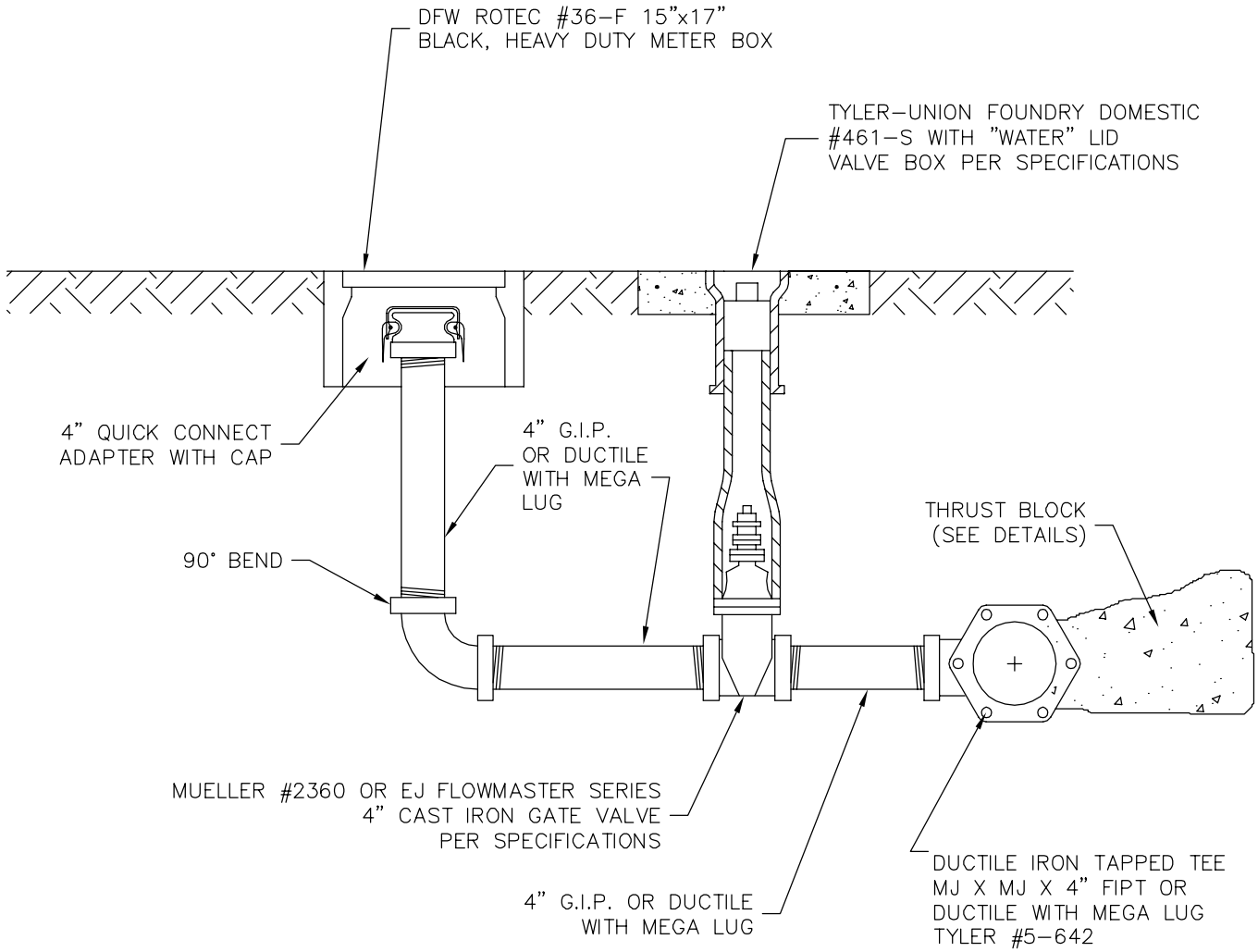


| | | | | |
|---|---|---|---|---|
| CITY OF WILDWOOD<br>100 NORTH MAIN STREET<br>WILDWOOD, FLORIDA 34785<br>(352) 330-1330 | SCALE<br>NONE<br>LATEST REVISION<br>11-10-14 | CITY OF WILDWOOD WATER DETAIL<br>4" BLOW-OFF | DETAIL NUMBER<br>W-12<br>1 OF 1 |

Drawing name: G:\Cities and Counties\Wildwood\Standard Details\WATER\W-12 Blow Off-4.dwg Model Nov 10, 2014 5:42pm by: Kevin.Vickers

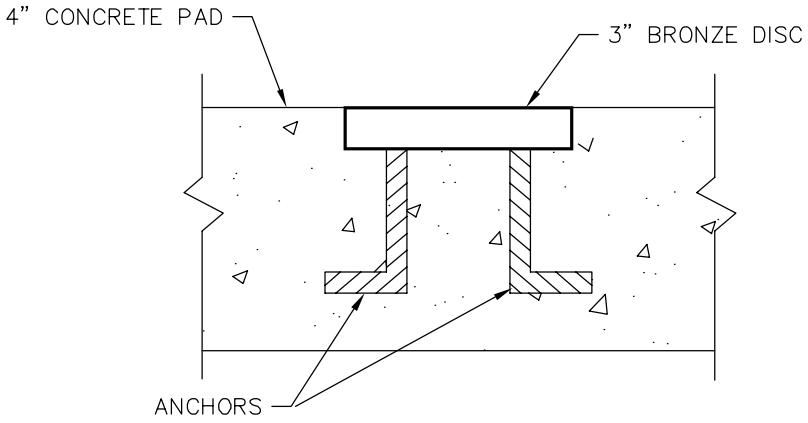


## DISC DETAIL

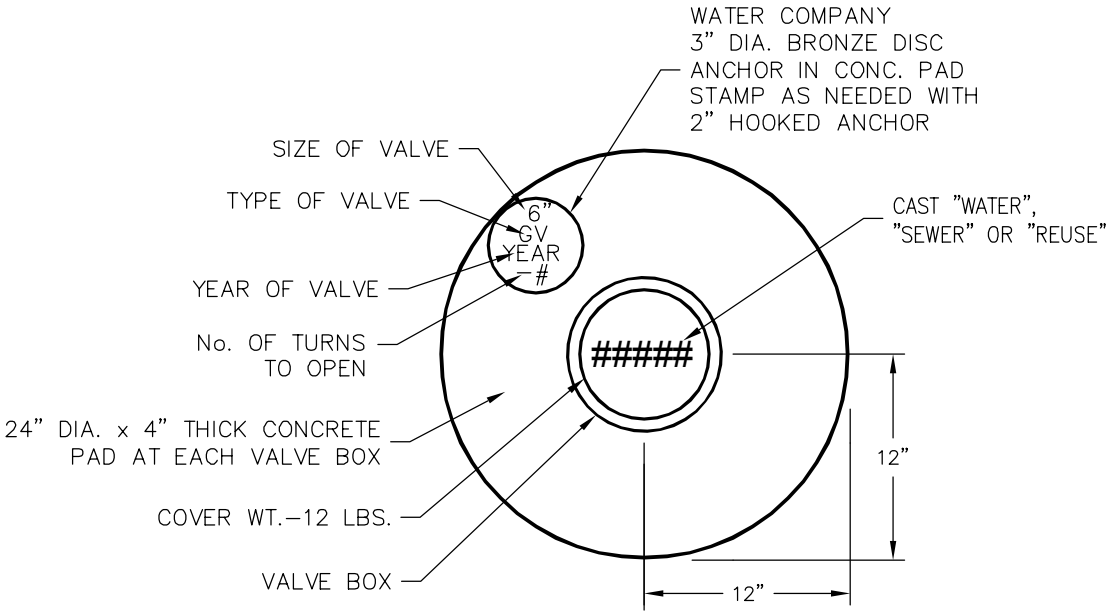


## PLAN

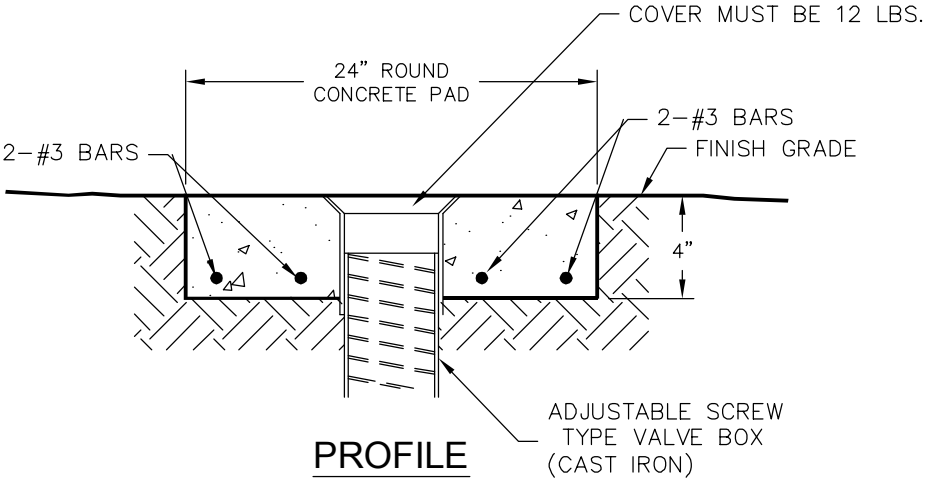


## PROFILE

| | | | | |
|---|---|---|---|---|
| CITY OF WILDWOOD<br>100 NORTH MAIN STREET<br>WILDWOOD, FLORIDA 34785<br>(352) 330-1330 | SCALE<br>NONE<br>LATEST REVISION<br>11-10-14 | CITY OF WILDWOOD WATER DETAIL<br>CONCRETE VALVE PAD | DETAIL NUMBER<br>W-13<br>1 OF 1 |

Drawing name: G:\Cities and Counties\Wildwood\Standard Details\WATER\W-13 Concrete Valve Pad.dwg Model Nov 10, 2014 5:43pm by: Kevin.Vickers

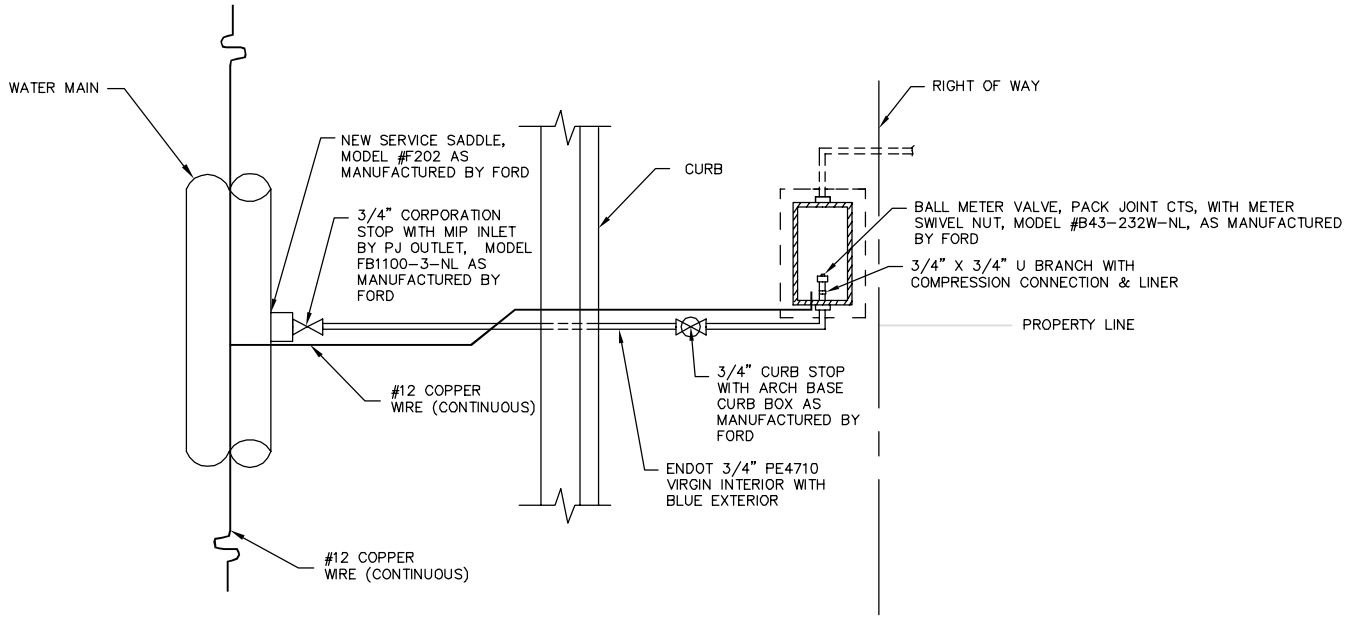


PLAN VIEW

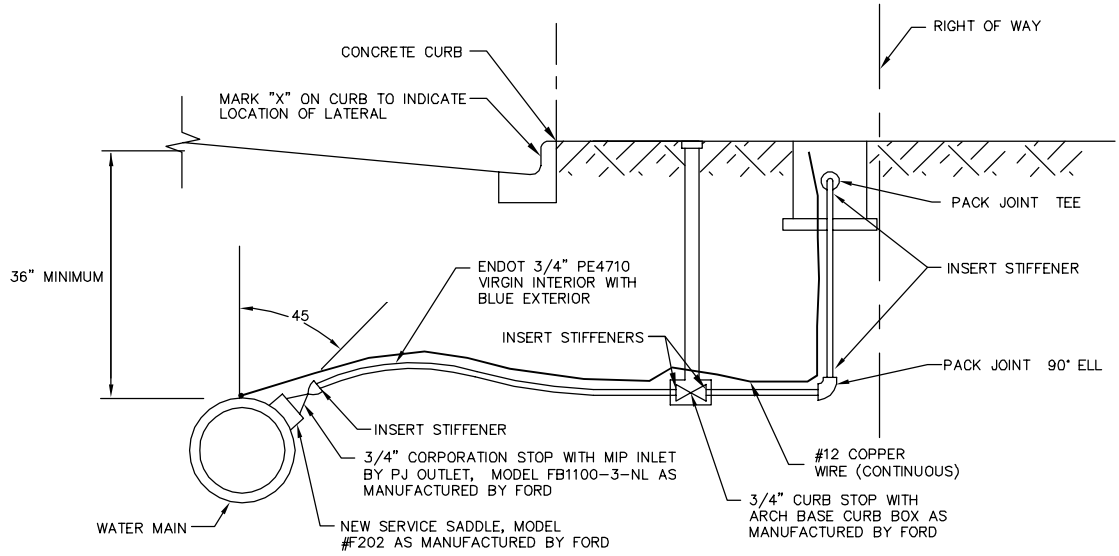


PROFILE VIEW

NOTES:

1. ALL SERVICE CONNECTION PIPE SHALL BE COMPOSED OF THE SAME MATERIAL TYPE AND SIZE FROM THE CORPORATION STOP TO THE METER.
2. FOR NON-TRAFFIC BEARING APPLICATIONS, BOX SHALL BE DFW-ROTEC SERIES C POLYMER ENCLOSURE (SIZE 36F) WITH CAST IRON LID. FOR TRAFFIC BEARING APPLICATIONS (SIDEWALKS, DRIVEWAYS, ETC.), METER BOX SHALL BE CONCRETE WITH A CAST IRON LID.
3. THE OUTLET SIZE ON THE SADDLE TAP, CORPORATION STOP SIZE AND SERVICE LINE SIZE SHALL BE THE SAME.
4. METER BOXES SHALL BE LOCATED WITHIN THE RIGHT-OF-WAY AT THE PROPERTY LINE.
5. THIS DETAIL APPLIES TO 3/4" THROUGH 1" SERVICES

| | | | | |
|---|---|---|---|---|
| CITY OF WILDWOOD<br>100 NORTH MAIN STREET<br>WILDWOOD, FLORIDA 34785<br>(352) 330-1330 | SCALE<br>NONE<br>LATEST REVISION<br>11-17-14 | CITY OF WILDWOOD WATER DETAIL<br>SINGLE WATER SERVICE CONNECTION | DETAIL NUMBER<br>W-14<br>1 OF 3 |

Drawing name: G:\Cities and Counties\Wildwood\Standard Details\WATER\W-14.1 Water Service Connection.dwg Model Nov 17, 2014 11:37am by: Kevin.Vickers

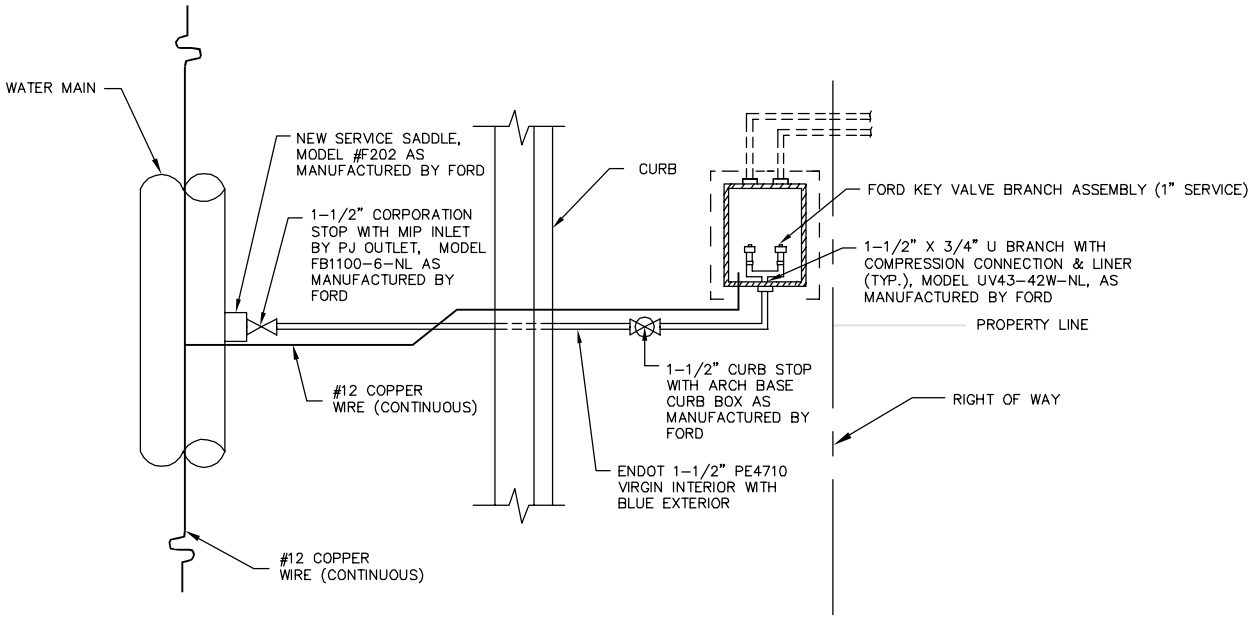


PLAN VIEW

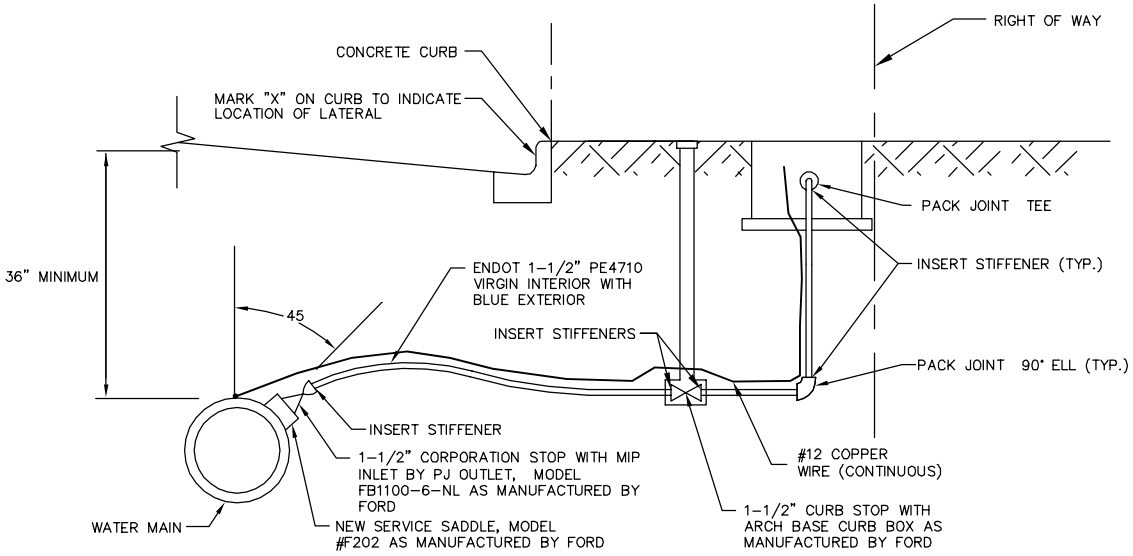


PROFILE VIEW

NOTES:

1. ALL SERVICE CONNECTION PIPE SHALL BE COMPOSED OF THE SAME MATERIAL TYPE AND SIZE FROM THE CORPORATION STOP TO THE METER.
2. FOR NON-TRAFFIC BEARING APPLICATIONS, BOX SHALL BE DFW-ROTEC SERIES C POLYMER ENCLOSURE (SIZE 36F) WITH CAST IRON LID. FOR TRAFFIC BEARING APPLICATIONS (SIDEWALKS, DRIVEWAYS, ETC.), METER BOX SHALL BE CONCRETE WITH A CAST IRON LID.
3. THE OUTLET SIZE ON THE SADDLE TAP, CORPORATION STOP SIZE AND SERVICE LINE SIZE SHALL BE THE SAME.
4. METER BOXES SHALL BE LOCATED WITHIN THE RIGHT-OF-WAY AT THE PROPERTY LINE.
5. THIS DETAIL APPLIES TO 1" THROUGH 2" SERVICES

| | | | | |
|---|---|---|---|---|
| CITY OF WILDWOOD<br>100 NORTH MAIN STREET<br>WILDWOOD, FLORIDA 34785<br>(352) 330-1330 | SCALE<br>NONE<br>LATEST REVISION<br>11-17-14 | CITY OF WILDWOOD WATER DETAIL<br>DUAL WATER SERVICE CONNECTION | DETAIL NUMBER<br>W-14<br>2 OF 3 |

Drawing name: G:\Cities and Counties\Wildwood\Standard Details\WATER\W-14.2 Water Service Connection.dwg Model Nov 17, 2014 11:42am by: Kevin.Vickers

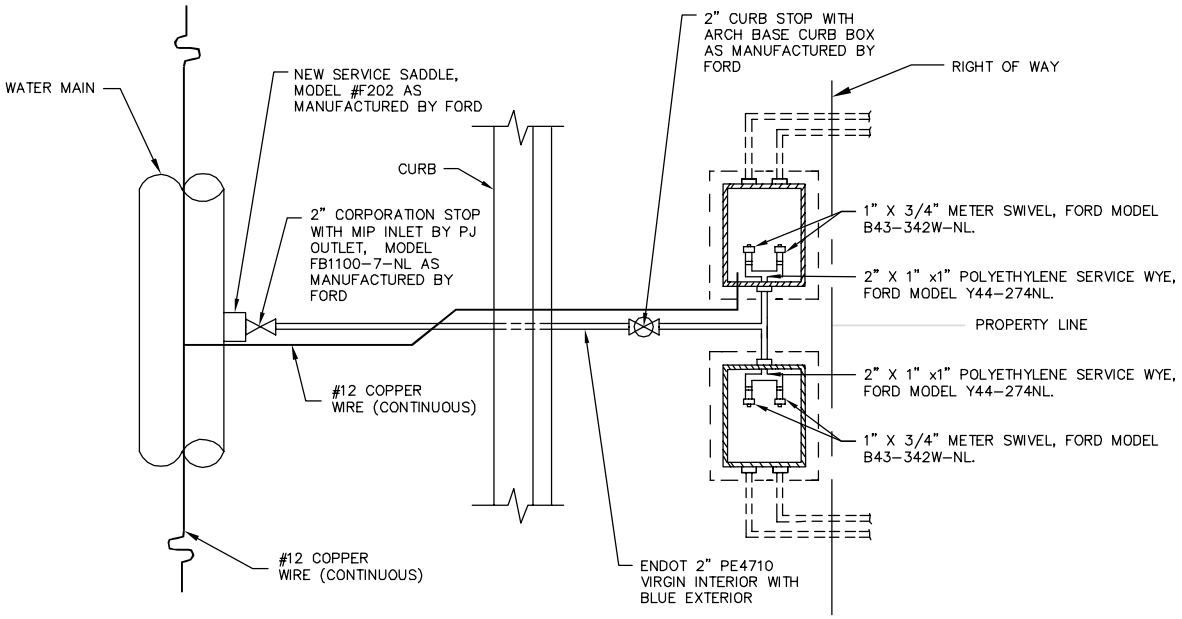


PLAN VIEW

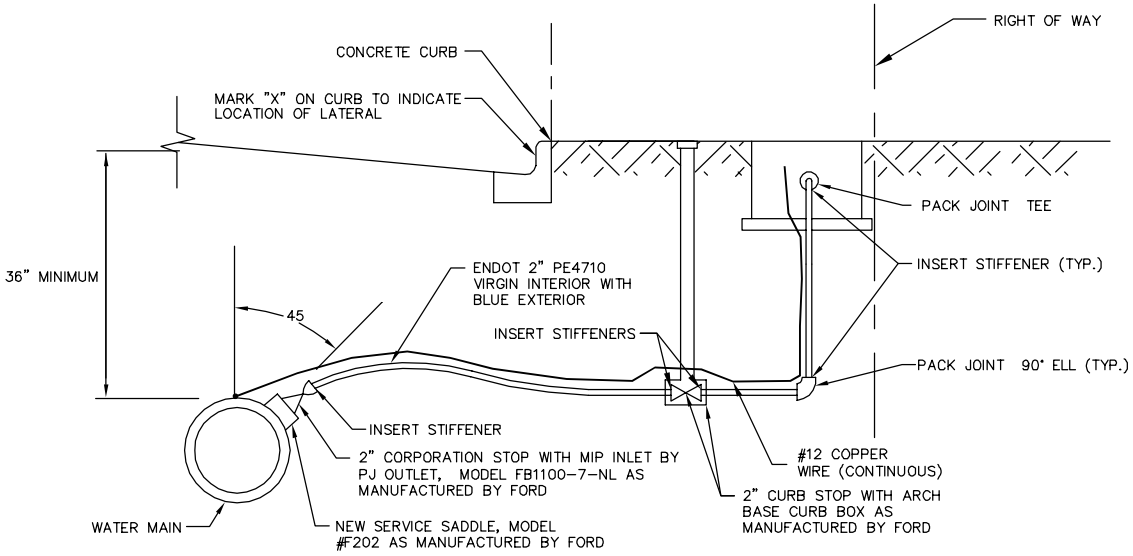


PROFILE VIEW

NOTES:

1. ALL SERVICE CONNECTION PIPE SHALL BE COMPOSED OF THE SAME MATERIAL TYPE AND SIZE FROM THE CORPORATION STOP TO THE METER.
2. FOR NON-TRAFFIC BEARING APPLICATIONS, BOX SHALL BE DFW-ROTEC SERIES C POLYMER ENCLOSURE (SIZE 36F) WITH CAST IRON LID. FOR TRAFFIC BEARING APPLICATIONS (SIDEWALKS, DRIVEWAYS, ETC.), METER BOX SHALL BE CONCRETE WITH A CAST IRON LID.
3. THE OUTLET SIZE ON THE SADDLE TAP, CORPORATION STOP SIZE AND SERVICE LINE SIZE SHALL BE THE SAME.
4. METER BOXES SHALL BE LOCATED WITHIN THE RIGHT-OF-WAY AT THE PROPERTY LINE.
5. THIS DETAIL APPLIES TO 2" SERVICES

| | | | | |
|---|---|---|---|---|
| CITY OF WILDWOOD<br>100 NORTH MAIN STREET<br>WILDWOOD, FLORIDA 34785<br>(352) 330-1330 | SCALE<br>NONE<br>LATEST REVISION<br>11-17-14 | CITY OF WILDWOOD WATER DETAIL<br>QUAD WATER SERVICE CONNECTION | DETAIL NUMBER<br>W-14<br>3 OF 3 |

Drawing name: G:\Cities and Counties\Wildwood\Standard Details\WATER\W-14.3 Water Service Connection.dwg Model Nov 17, 2014 11:44am by: Kevin.Vickers

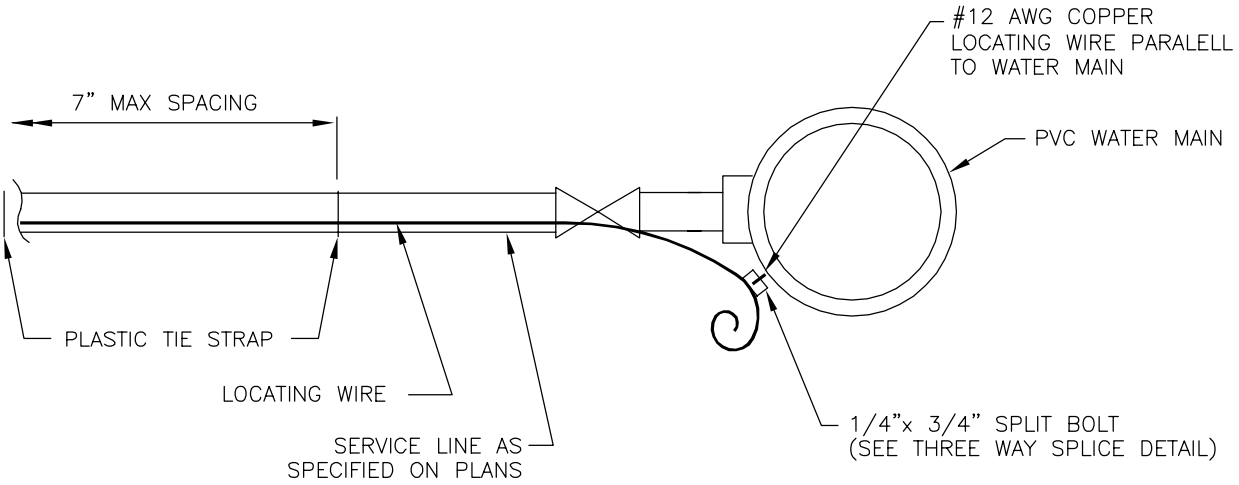


| | | | | |
|---|---|---|---|---|
| CITY OF WILDWOOD<br>100 NORTH MAIN STREET<br>WILDWOOD, FLORIDA 34785<br>(352) 330-1330 | SCALE<br>NONE<br>LATEST REVISION<br>11-17-14 | CITY OF WILDWOOD WATER DETAIL<br>LOCATING WIRE DETAIL | DETAIL NUMBER<br>W-15<br>1 OF 1 |

Drawing name: G:\Cities and Counties\Wildwood\Standard Details\WATER\W-15 Locating Wire.dwg Model Nov 17, 2014 11:53am by: Kevin.Vickers

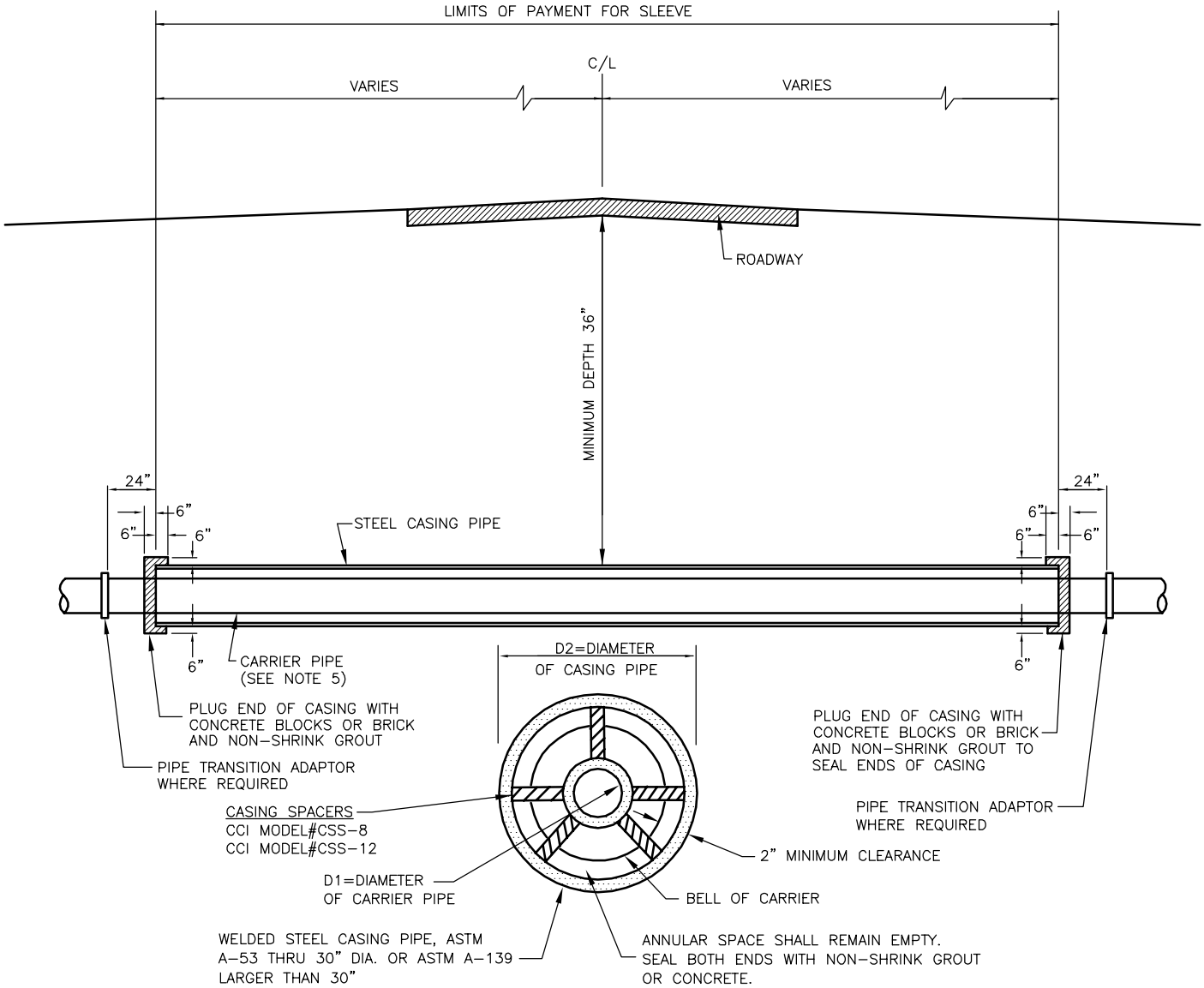


| CARRIER PIPE AND CASING PIPE SIZES (MIN) | | | | | | | | | | | | | |
|---|---|---|---|---|---|---|---|---|---|---|---|---|---|
| CARRIER PIPE NOMINAL DIAMETER (D1) | 4 | 6 | 8 | 10 | 12 | 14 | 16 | 18 | 20 | 24 | 30 | 36 | 42 |
| CASING PIPE NOMINAL DIA (D2) | 18 | 18 | 18 | 24 | 24 | 30 | 30 | 36 | 36 | 48 | 48 | 54 | 60 |
| WALL THICKNESS-INCHES | 0.31 | 0.31 | 0.31 | 0.33 | 0.33 | 0.38 | 0.38 | 0.42 | 0.42 | 0.52 | 0.52 | 0.58 | 0.61 |

## NOTES

1. THE INSIDE DIAMETER OF THE CASING SHALL BE A MINIMUM OF 6" GREATER THAN THE OUTSIDE DIAMETER OF THE CARRIER PIPE BELL OR COUPLING.
2. CASING FOR THE FORCE MAIN AND GRAVITY SEWER SHALL BE INSTALLED WITH A 2" VENT PIPE, WHERE REQUIRED, AT ONE END EXTENDING NOT LESS THAN 4' ABOVE GROUND SURFACE, AND ABOVE THE MAXIMUM ELEVATION OF HIGH WATER. THE TOP OF THE VENT PIPE SHALL BE FITTED WITH DOWN TURNED ELBOW PROPERLY SCREENED. THE VENT PIPE SHALL BE SCHEDULE NO. 40 GALVANIZED STEEL. VENT PIPE FOR WATER MAIN AND REUSE MAIN CASING IS NOT REQUIRED.
3. PAYMENT SHALL INCLUDE CASING, END ENCASEMENTS, TRANSITION ADAPTORS, VENT PIPES AND SPACERS.
4. INSTALL CASING SPACERS TO PROVIDE A MINIMUM OF THREE PER JOINT OF PIPE. INSTALL IN ACCORDANCE WITH THE MANUFACTURER'S WRITTEN INSTRUCTIONS.
5. PIPING INSIDE CASING IS TO BE RESTRAINED JOINT PIPING.

CITY OF WILDWOOD
100 NORTH MAIN STREET
WILDWOOD, FLORIDA 34785
(352) 330-1330

SCALE: NONE

LATEST REVISION: 11-10-14

CITY OF WILDWOOD WATER DETAIL

UTILITY SLEEVE DETAIL

DETAIL NUMBER: W-16



Drawing name: G:\Cities and Counties\Wildwood\Standard Details\WATER\W-16 Sleeve Detail.dwg Model Nov 10, 2014 5:46pm by: Kevin.Vickers

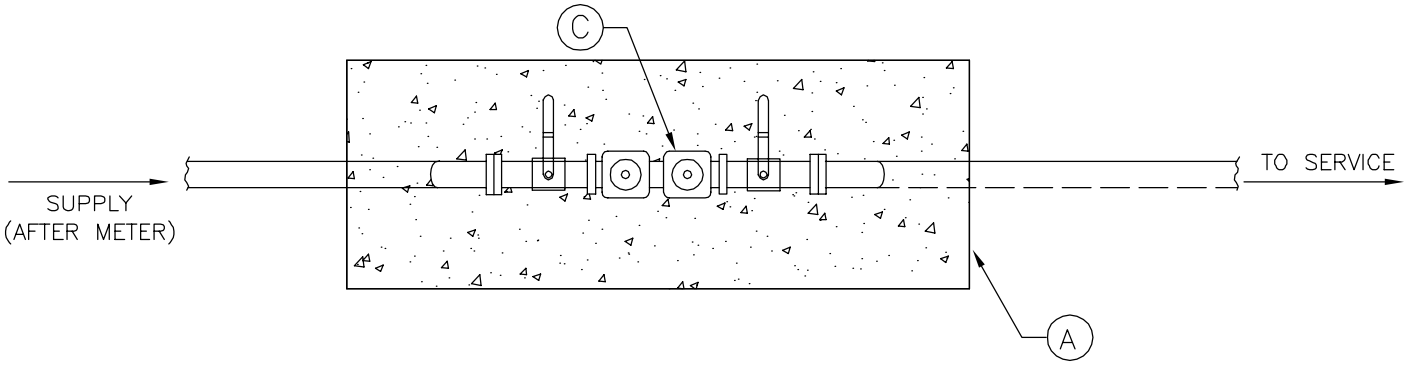


PLAN VIEW

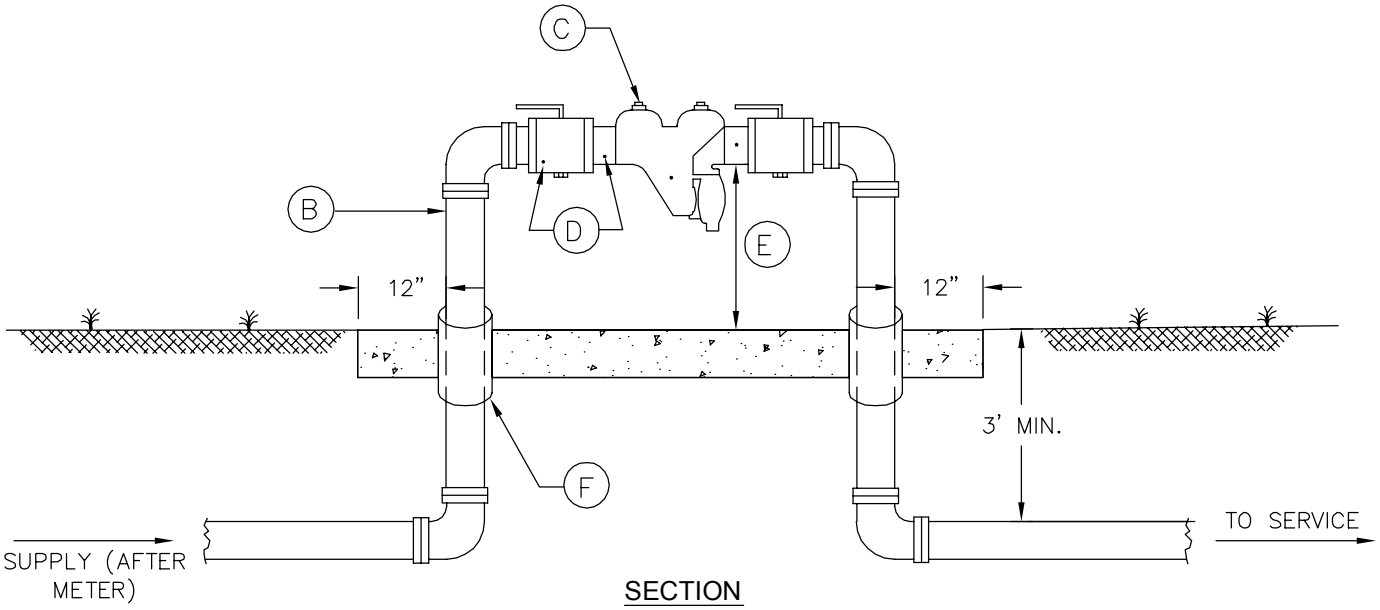


SECTION

(A) REINFORCED 4" THICK CONCRETE PAD WITH ONE LAYER 6"x6" WWF (3' WIDE)

(B) TYPE "L" OR "K" HARD COPPER OR BRASS (NO GALVANIZED)

(C) REDUCED PRESSURE BACKFLOW PREVENTER WILKINS MODEL #975XL2-NO LEAD WITH BALL VALVES

(D) TEST COCKS

(E) 12" MIN. – 18" MAX. CLEARANCE

(F) SLEEVE AROUND PIPE TO PROTECT IT FROM CONCRETE

NOTES:

ALL RIGID PIPE AND FITTINGS, NO PVC ABOVE GROUND

| | | | | |
|---|---|---|---|---|
| CITY OF WILDWOOD<br>100 NORTH MAIN STREET<br>WILDWOOD, FLORIDA 34785<br>(352) 330-1330 | SCALE<br>NONE<br>LATEST REVISION<br>11-10-14 | CITY OF WILDWOOD WATER DETAIL<br>REDUCED PRESSURE BACKFLOW PREVENTER | DETAIL NUMBER<br>W-17<br>1 OF 1 |

Drawing name: G:\Cities and Counties\Wildwood\Standard Details\WATER\W-17 Reduced Pressure Backflow Preventer.dwg Model Nov 10, 2014 5:47pm by: Kevin.Vickers

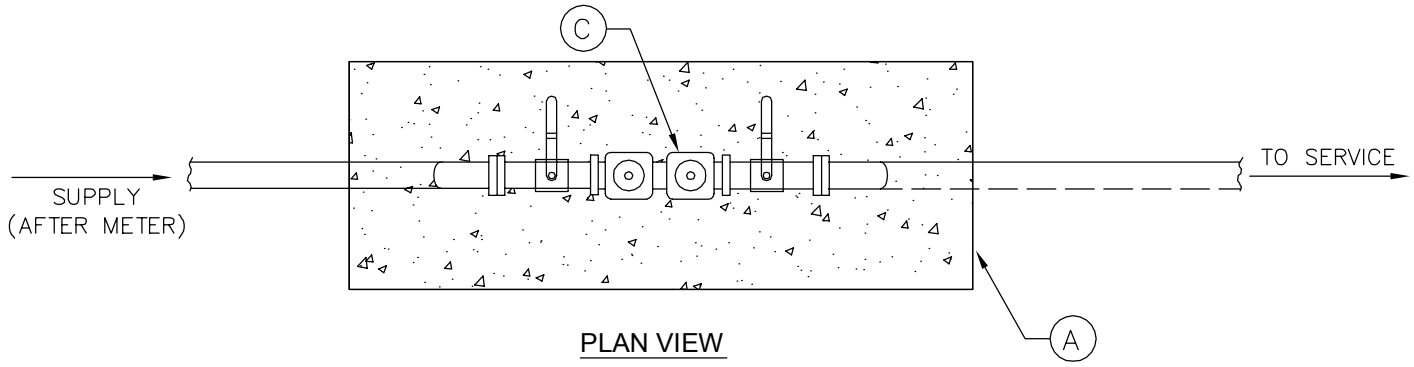


PLAN VIEW

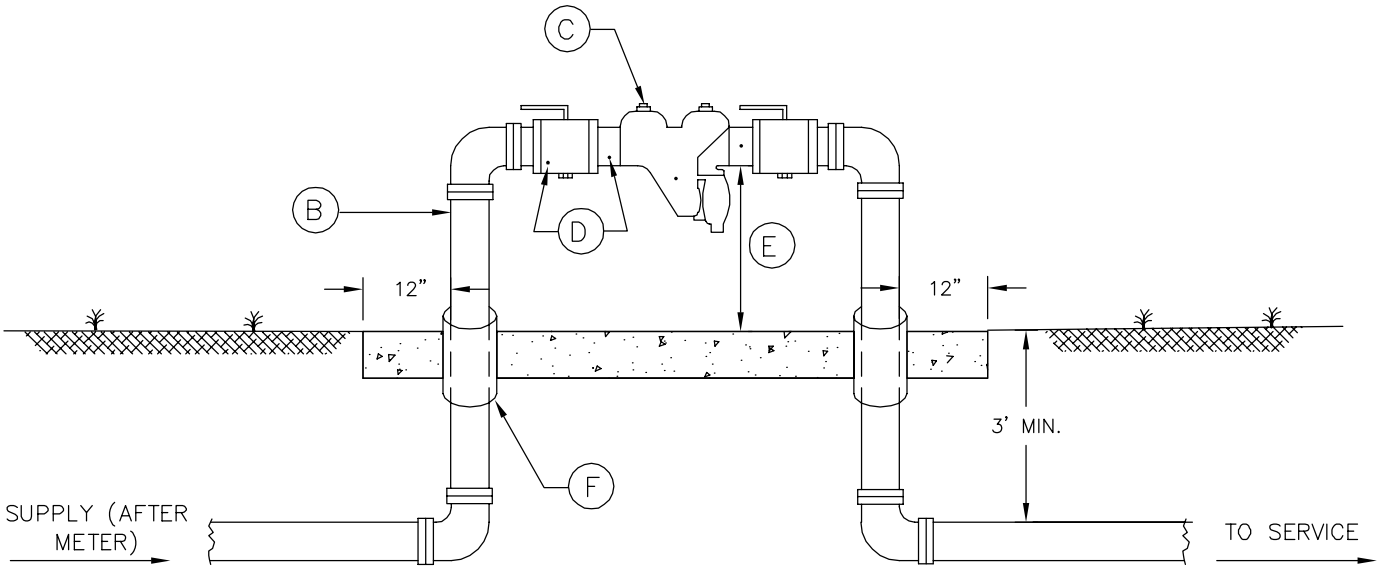


SECTION

(A) REINFORCED 4" THICK CONCRETE PAD WITH ONE LAYER 6"x6" WWF (3' WIDE)

(B) TYPE "L" OR "K" HARD COPPER OR BRASS (NO GALVANIZED)

(C) DOUBLE CHECK BACKFLOW PREVENTOR WILKINS MODEL #950XL2–NO LEAD WITH BALL VALVES

(D) TEST COCKS

(E) 12" MIN. – 18" MAX. CLEARANCE

(F) SLEEVE AROUND PIPE TO PROTECT IT FROM CONCRETE

NOTES:

ALL RIGID PIPE AND FITTINGS, NO PVC ABOVE GROUND

| | | | | |
|---|---|---|---|---|
| CITY OF WILDWOOD<br>100 NORTH MAIN STREET<br>WILDWOOD, FLORIDA 34785<br>(352) 330–1330 | SCALE<br>NONE<br>LATEST REVISION<br>11–10–14 | CITY OF WILDWOOD WATER DETAIL<br>DOUBLE CHECK<br>BACKFLOW PREVENTER | DETAIL NUMBER<br>W-18<br>1 OF 1 |

Drawing name: G:\Cities and Counties\Wildwood\Standard Details\WATER\W-18 Double Check Backflow Preventer.dwg Model Nov 10, 2014 5:50pm by: Kevin.Vickers

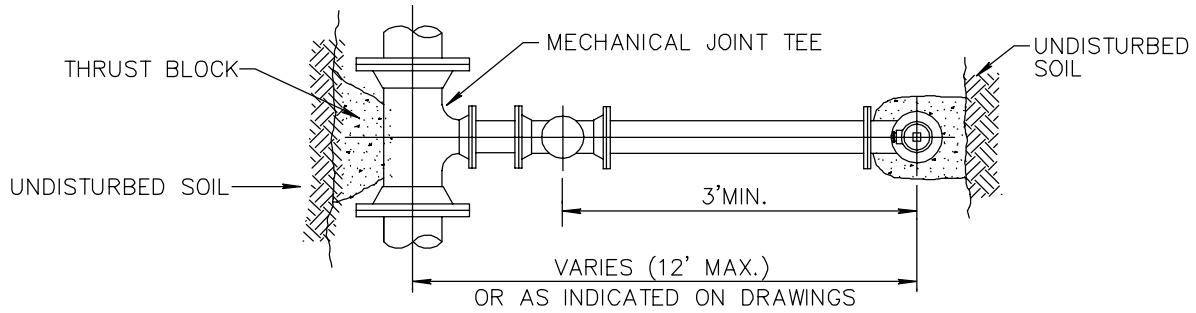


PLAN

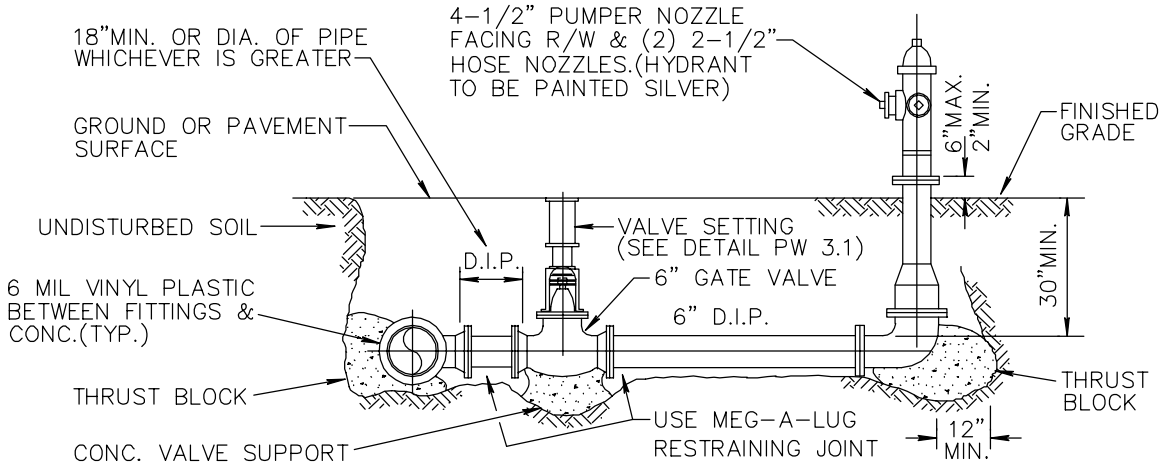


ELEVATION

NOTES

1. HYDRANT SHALL BE INSTALLED PLUMB AND TRUE IN UNOBSTRUCTED LOCATION. (5' CLEARANCE ON ALL SIDES WITH 3' ACCESS LANE)
2. NO BARREL EXTENSION SHALL BE PERMITTED WITHOUT PRIOR CONSENT OF CITY ENGINEER.
3. VALVE SHALL BE PLACED ADJACENT TO MAIN, TIED TO TEE.
4. ANCHOR TEES AND FITTINGS ARE PERMITTED.
5. HYDRANT SHALL BE MUELLER CENTURION OR EJ FLOWMASTER WITH TRAFFIC BREAKAWAY FLANGE AND 5-1/4" VALVE.
6. HYDRANTS SHALL NOT ENCROACH IN SIDEWALKS, ROADWAYS, OR BIKE PATHS.
7. ON RUNS LONGER THAN 20 FEET A SECOND VALVE IS REQUIRED AT THE HYDRANT.
8. ALL HYDRANT INSTALLATION SHALL BE IN ACCORDANCE WITH SUMTER COUNTY FIRE PREVENTION ORDINANCE.
9. IN CERTAIN SITUATIONS, PROTECTIVE BOLLARDS MAY BE REQUIRED AS DIRECTED BY THE ENGINEERING DEPT. (SEE BOLLARD DETAIL PW 5.2)
10. FIRE HYDRANTS INSTALLED BUT NOT YET IN SERVICE SHALL BE COVERED WITH A BURLAP, OR PLASTIC SACK, OR HAVE OUT OF SERVICE RING IN PLACE.

| | | | | |
|---|---|---|---|---|
| CITY OF WILDWOOD<br>100 NORTH MAIN STREET<br>WILDWOOD, FLORIDA 34785<br>(352) 330-1330 | SCALE<br>NONE<br>LATEST REVISION<br>11-10-14 | CITY OF WILDWOOD WATER DETAIL<br>FIRE HYDRANT ASSEMBLY | DETAIL NUMBER<br>W-19<br>1 OF 1 |

Drawing name: G:\Cities and Counties\Wildwood\Standard Details\WATER\W-19 Fire Hydrant Assembly.dwg Model Nov 10, 2014 5:51pm by: Kevin.Vickers

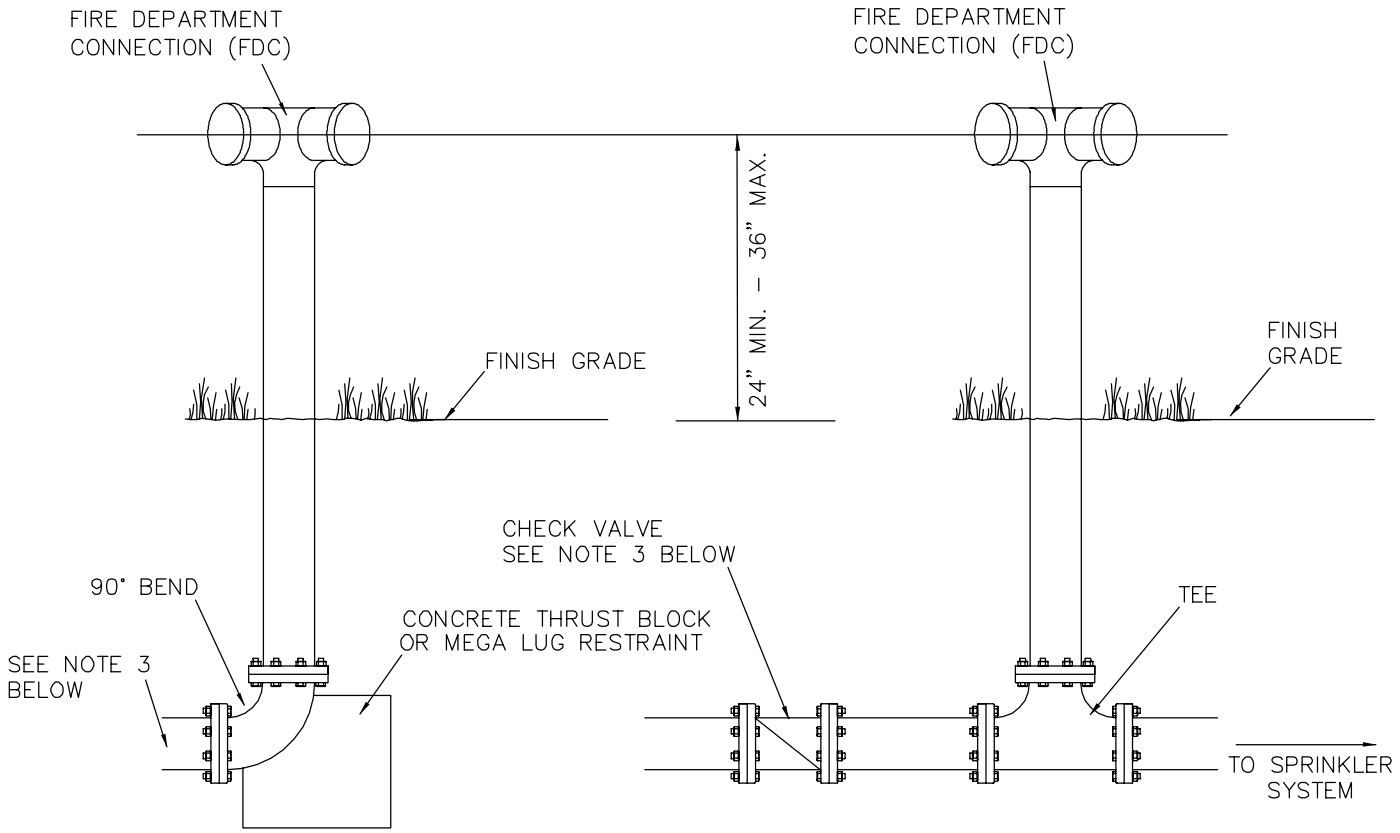


REMOTE FDC CONNECTION

INLINE FDC CONNECTION

NOTES

1. ALL ABOVE–GROUND PARTS OF THE FDC ASSEMBLY, INCLUDING PIPING, SHALL BE PAINTED "SAFETY RED".
2. PROVIDE AN INLINE CHECK VALVE WHERE INLINE FDC CONNECTIONS ARE INSTALLED AND FIRE HYDRANTS ARE CONNECTED UPSTREAM.
3. PROVIDE AN INLINE CHECK VALVE WHERE FDC CONNECTIONS ARE INSTALLED AND FIRE HYDRANTS ARE CONNECTED UPSTREAM. INSTALL CHECK BETWEEN FDC AND HYDRANT LOCATION.
4. FDC MAY BE MOUNTED ON DOUBLE CHECK DETECTOR ASSEMBLIES (DCDA).

| | | | | |
|---|---|---|---|---|
| CITY OF WILDWOOD<br>100 NORTH MAIN STREET<br>WILDWOOD, FLORIDA 34785<br>(352) 330–1330 | SCALE<br>NONE<br>LATEST REVISION<br>01–04–12 | CITY OF WILDWOOD WATER DETAIL<br>FIRE DEPARTMENT CONNECTION<br>(3" OR GREATER) | DETAIL NUMBER<br>W-20<br>1 OF 1 |

Drawing name: G:\Cities and Counties\Wildwood\Standard Details\WATER\W-20 Fire Dept Connection.dwg Model Nov 10, 2014 5:51pm by: Kevin.Vickers

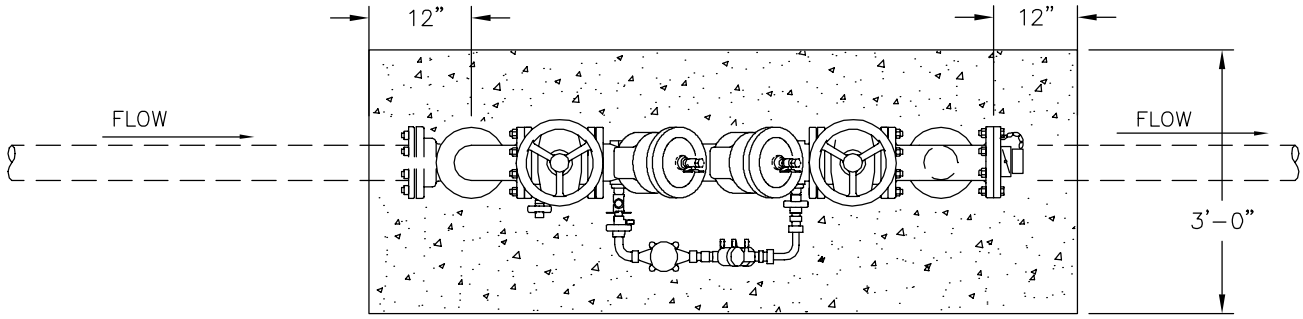


PLAN VIEW

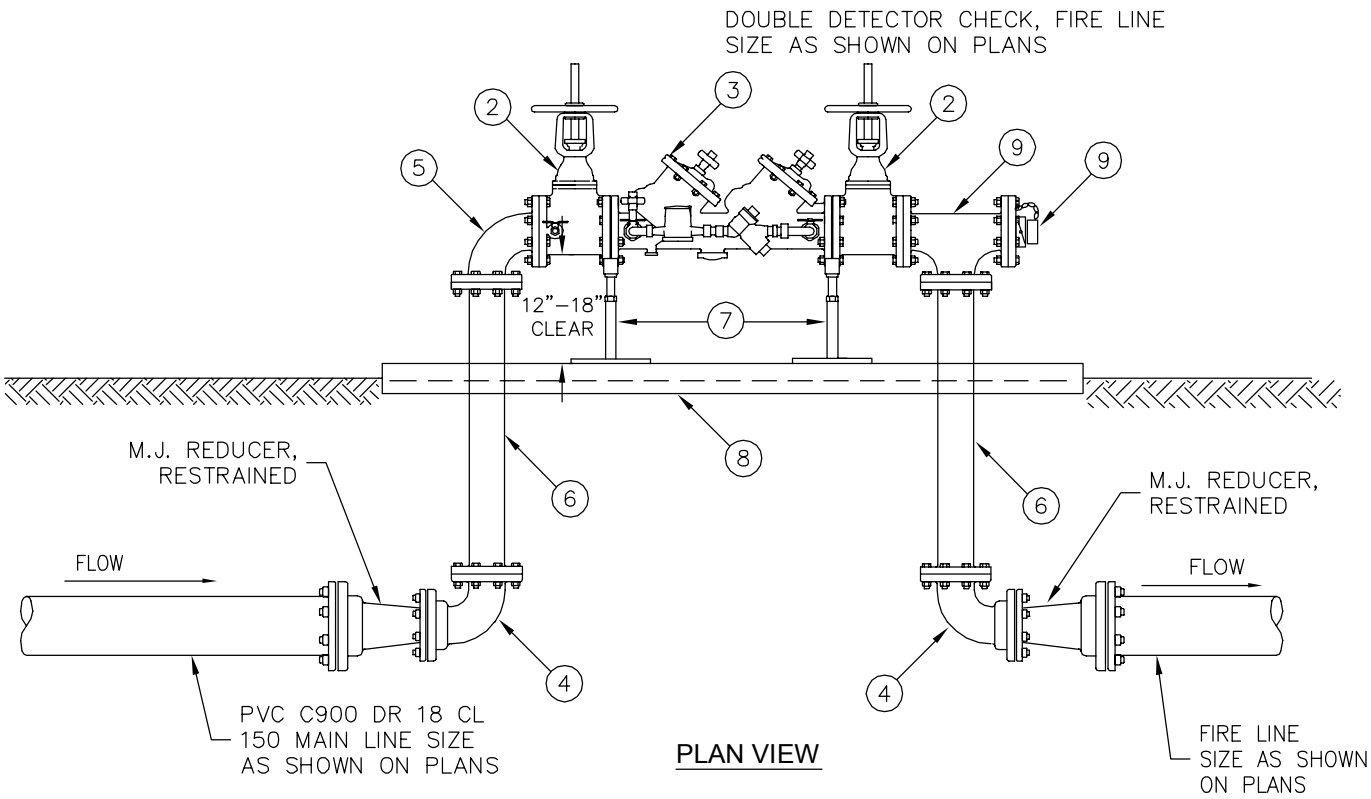


PLAN VIEW

## FIRE LINE BACKFLOW PREVENTER LEGEND

1. DISTRIBUTION SYSTEM RESTRAIN ONE (1) JOINT FROM FITTING IN EACH DIRECTION
2. GATE VALVE (RESILIENT SEAL), OS&Y, FLANGED, PROVIDE 3/4" GALVANIZED CHAIN AND PADLOCK FOR EACH VALVE.(SIZE PER PLAN)
3. DOUBLE DETECTOR CHECK VALVE, WILKINS #350DA WITH OS&Y GATE VALVES
4. 90° BEND, M.J., RESTRAINED (BELOW GRADE)
5. 90° BEND, FLANGED
6. CLASS 53 DIP
7. CONCRETE PIPE SUPPORT
8. CONCRETE SLAB, 6" THICK, No. 4 BARS, 12" OCEW WITH VISQUEEN VAPOR BARRIER.
9. TEE WITH FIRE DEPT. CONNECTION WITH CHECK VALVE. (SIZE PER PLAN)

| | | | | |
|---|---|---|---|---|
| CITY OF WILDWOOD<br>100 NORTH MAIN STREET<br>WILDWOOD, FLORIDA 34785<br>(352) 330-1330 | SCALE<br>NONE<br>LATEST REVISION<br>11-10-14 | CITY OF WILDWOOD WATER DETAIL<br>FIRE LINE BACKFLOW PREVENTER DEVICE | DETAIL NUMBER<br>W-21<br>1 OF 1 |

Drawing name: G:\Cities and Counties\Wildwood\Standard Details\WATER\W-21 Fire Line Backflow Preventer.dwg Model Nov 10, 2014 5:52pm by: Kevin.Vickers